The Soles and Spokes
Regional Pedestrian and Bicycle Plan
for Chicago Area Transportation

Documentation of IDOT Policy

March, 2004

Prepared by
Chicago Area Transportation Study
Plan Development Division
300 W Adams St 2nd Floor
Chicago IL 60606
312-793-3466

The following policies and procedures are included in the IDOT's Bureau of Design and Environment Manual.

CHAPTER FIVE
LOCAL AGENCY AGREEMENTS

5-3.07 Sidewalks
The Municipality will maintain any new or replacement sidewalks the Department provides in the improvement, including those constructed on structures.[1]

5-5.02(b) Sidewalks
For sidewalks, the Agreement will be based on the following to determine the division of cost between State and Municipality:

1. New and Deteriorated Sidewalks. Use the criteria in Chapters 17 and 48 to determine the warrants for sidewalks. If these criteria are met and the Municipality agrees to maintain the sidewalks, proportion the improvement costs associated with new or deteriorated sidewalks as follows:

    a. New Sidewalks. Proportion the cost equally (i.e., 50%/50%) between the State and Municipality for new sidewalks within the project termini or for short distances outside the project termini as may be required to connect sidewalks to significant pedestrian generators (e.g., schools, transit facilities). The Phase I Study Report will document the need for sidewalk construction.

    b. Deteriorated Sidewalks. The Municipality will pay 100% of the cost to remove existing deteriorated sidewalks. Proportion the cost 50%/50% between the State and Municipality for deteriorated sidewalk replacement.

    c. Utility Adjustments and Other Items. The Municipality is 100% financially responsible for utility adjustments, pedestrian barriers, retaining walls, and other similar items that are required solely for sidewalk construction not necessitated by the IDOT project.

    d. Right-of-Way. The Municipality is 100% financially responsible for right-of-way if acquired solely for sidewalk construction. Also, the Municipality will pay 100% of the construction costs for sidewalks associated with the construction of onsystem parking not necessitated by the IDOT project. The State will pay 100% for right-of-way if additional right-of-way is required to construct an IDOT-proposed highway cross section.

    e. Sidewalk Removal and Replacement. The State is 100% financially responsible for removing and replacing existing sidewalks if such a need is caused by the construction of an IDOT highway improvement.

[1] Ibid., 5-3.07

If sidewalk construction will adversely delay the improvement, consider deleting sidewalk construction from the contract. All sidewalk construction will be considered straight State funded.

2. Adjustment of Existing Sidewalks. If an existing sidewalk requires adjustment due to an IDOT improvement, the State will pay 100% of the adjustment cost. The Department will construct the replacement either in kind or in accordance with IDOT sidewalk criteria, whichever is more economical. The Municipality is 100% financially responsible for sidewalk adjustments that are caused or initiated by a work request from the Municipality.[2]

[2] Ibid., 5-5.02(b)

IDOT Bureau of Design and Environment Manual: Excerpt From:

CHAPTER SEVENTEEN
BICYCLE AND PEDESTRIAN ACCOMMODATIONS

IDOT Bureau of Design and Environment Manual: Excerpts From:

[Insert PDF here]

Chapter Seventeen

BICYCLE AND PEDESTRIAN ACCOMMODATIONS

BUREAU OF DESIGN AND ENVIRONMENT MANUAL

Chapter Seventeen
BICYCLE AND PEDESTRIAN ACCOMMODATIONS

Table of Contents

Section **Page**

17-1 BICYCLE ACCOMMODATIONS: POLICIES AND PROCEDURES ..... 17-1(1)

17-1.01 Definitions ..... 17-1(1)
17-1.02 Policies ..... 17-1(2)

17-1.02(a) Exceptions ..... 17-1(2)
17-1.02(b) Partial Exceptions ..... 17-1(2)

17-1.03 Bikeway Warrants ..... 17-1(3)
17-1.04 Determining Bicycle Travel Demand ..... 17-1(3)

17-1.04(a) Assessment of Bicycle Travel Within Highway Projects . 17-1(4)
17-1.04(b) Bicycle Travel Generators in Project Vicinity ..... 17-1(4)
17-1.04(c) Public Coordination ..... 17-1(4)
17-1.04(d) Bicycle Travel Assessment ..... 17-1(5)

17-1.05 Maintenance and Jurisdiction ..... 17-1(5)
17-1.06 Right-of-Way ..... 17-1(5)
17-1.07 Funding ..... 17-1(7)

17-2 DESIGN CRITERIA FOR BICYCLE FACILITIES ..... 17-2(1)

17-2.01 On-Road Accommodations ..... 17-2(1)

17-2.01(a) On-Road Bikeways on Rural Roadways ..... 17-2(1)
17-2.01(b) On-Road Bikeways On Shared Urban Roadways ..... 17-2(2)
17-2.01(c) On-Road Marked Bicycle Lanes on Urban Roadways .... 17-2(4)
17-2.01(d) Intersections ..... 17-2(6)
17-2.01(e) Bikeway on Highway Structures ..... 17-2(10)
17-2.01(f) Bikeway Adjacent to Highways ..... 17-2(17)
17-2.01(g) Additional Considerations for Accommodations on Existing Roadways ..... 17-2(17)
17-2.01(h) Incidental Design Factors ..... 17-2(20)
17-2.01(i) Bicycle Routes ..... 17-2(22)
17-2.01(j) Signing, Marking, and Traffic Control ..... 17-2(23)

Table of Contents
(Continued)

Section **Page**

17-2.02 Separated Bicycle Facilities ..... 17-2(26)

17-2.02(a) Bicycle Path Warrants ..... 17-2(27)
17-2.02(b) Bike Paths Versus Sidewalks ..... 17-2(27)
17-2.02(c) Shared-Use Paths ..... 17-2(27)
17-2.02(d) Width and Clearance ..... 17-2(29)
17-2.02(e) Design Speed ..... 17-2(33)
17-2.02(f) Horizontal Alignment and Superelevation ..... 17-2(33)
17-2.02(g) Drainage ..... 17-2(35)
17-2.02(h) Grade ..... 17-2(37)
17-2.02(i) Accessibility ..... 17-2(38)
17-2.02(j) Sight Distance ..... 17-2(39)
17-2.02(k) Bike Path Intersections ..... 17-2(40)
17-2.02(l) Structures ..... 17-2(44)
17-2.02(m) Signing and Marking ..... 17-2(47)
17-2.02(n) Lighting ..... 17-2(51)
17-2.02(o) Restriction of Motor Vehicle Traffic ..... 17-2(51)
17-2.02(p) Pavement Structure ..... 17-2(52)

17-3 BICYCLE OPERATING CHARACTERISTICS ..... 17-3(1)

17-4 PEDESTRIAN ACCOMMODATIONS ..... 17-4(1)

17-4.01 General ..... 17-4(1)
17-4.02 Policies ..... 17-4(1)
17-4.03 Warrants ..... 17-4(1)
17-4.04 Design ..... 17-4(2)
17-4.05 Documentation ..... 17-4(2)
17-4.06 Pedestrian Accommodations During Construction ..... 17-4(2)
17-4.07 Maintenance and Jurisdiction ..... 17-4(3)

17-5 REFERENCES ..... 17-5(1)

17-6 BICYCLE CHECKLISTS ..... 17-6(1)

CHAPTER SEVENTEEN

BICYCLE AND PEDESTRIAN ACCOMMODATIONS

When planning transportation improvements, the Department considers the travel needs of all users of a transportation corridor including bicyclists and pedestrians. Bicycle and pedestrian travel demand in the vicinity of a project is determined early in the project planning phase. When sufficient demand is indicated, the Department will provide the appropriate accommodations.

The correct application of the criteria and guidelines presented in Chapter 17 will result in consistent designs and subtle roadway design changes that will facilitate bicycle and pedestrian travel. Such changes will provide improved transportation opportunities for both bicyclists and pedestrians.

17-1 BICYCLE ACCOMMODATIONS: POLICIES AND PROCEDURES

17-1.01 Definitions

The following terms and definitions apply to Chapter 17:

1. Bikeway. A generic term for any road, street, path, or way which in some manner is specifically designated for bicycle travel, regardless of whether such facilities are designated for the exclusive use of bicycles or shared with other transportation modes.

2. Shared Roadway. Any roadway upon which a separate bicycle lane is not designated and which may be legally used by bicyclists regardless of whether such facility is specifically designated as a bikeway.

3. Bike Lane. The portion of a roadway surface that is designated by pavement markings and signing for the exclusive use of bicyclists.

4. Bicycle Path or Shared-Use Trail. A facility physically separated from the roadway and intended for bicycle or other non-motorized transportation (e.g., pedestrians, disabled persons in wheelchairs, in-line skaters). The terms path and trail generally are describing the same facility.

5. Bicycle Facilities. A broad term which includes bikeways, shared roadways, shoulders (which may be used by bicyclists), traffic control devices, shelters, and parking facilities for bicycles.

17-1.02 Policies

During the development of highway projects, give consideration to accommodating bicyclists and pedestrians. Assess bicycle travel demand during the early planning stage of a project. Provide bicycle accommodations when the warrants presented in Section 17-1.03 are met. For projects that include bicycle accommodation, forward a copy of the draft Phase I report to the Bureau of Design and Environment's Bicycle Coordinator. Where existing or anticipated bicycle and/or pedestrian traffic presents a potential conflict with motor vehicle traffic, strive to minimize the detrimental effects on all highway users who share the facility.

On bridge deck replacement or rehabilitation projects, bicyclists will be accommodated on the bridge when bicycles are permitted to operate on the roadway approaches.

If independent bikeways or trails are impacted as a result of a highway project, treat such facilities as low-volume roadways in accordance with Chapter 11. If certified by the State or Local Agency having jurisdiction as programmed for construction no later than five years beyond the anticipated completion of the highway project, treat proposed or planned paths and trails that cross or parallel a roadway in the same manner as existing roadways.

17-1.02(a) Exceptions

Consider accommodating bicycles and pedestrians on all projects except:

- along fully access controlled highway facilities on which bicycle and pedestrian access is prohibited (Illinois law allows the Department to restrict access by signing). Note: Consideration for bicycle and pedestrian accommodation crossing a fully access controlled highway will be granted an exception from consideration only if the traversing road is also a fully access controlled highway; and

- existing pavement resurfacing projects that do not widen the existing traveled way nor provide stabilized shoulders (e.g., SMART, 3P). However, in the development of SMART and 3P projects, consider accommodations which do not change the overall scope of work, such as striping changes, but are consistent with Department criteria and the needs of bicyclists (see Section 17-2.01(g)).

17-1.02(b) Partial Exceptions

On existing pavement resurfacing projects that do not widen the existing traveled way nor provide stabilized shoulders (e.g., 3-P, SMART) bicycle accommodation will generally be limited to restriping and/or resigning existing bike lanes or shared roadways. However, consideration may also be given for new bicycle accommodation on 3-P or SMART projects where local support is evident and the accommodated project remains limited to the overall scope of the

original road work. Design criteria should be consistent with Section 17-2.01. Design studies are not required.

17-1.03 Bikeway Warrants

Provide adequate on-road accommodations for bicycle travel in highway projects when any of the following situations exists:

- The highway or street is designated as a bikeway in a regionally or locally adopted bike plan or is published in a regionally or locally adopted map as a recommended bike route.

- The projected two-way bicycle traffic volume (see Section 17-1.04) will approximate 25 ADT or more during the peak three months of the bicycling season at a highway or street location where the current vehicular traffic volume will exceed 1000 ADT. Estimate the bicycle ADT projection based on a five-year time frame from completion of the project.

- The route provides primary access to a park, recreational area, school, or other significant destination.

- The route provides unique access across a natural or man-made barrier (e.g., bridges over rivers, bridges over railroad yards, bridges over freeways or expressways, highways through a National Forest).

- The highway project will negatively affect the recreational or transportation utility of an independent bikeway or trail. Highway projects will negatively affect at-grade paths and trails when they are severed, when the projected roadway traffic volumes increase to a level that prohibits safe crossings at-grade, or when the widening of the roadway prohibits sufficient time for safe crossing.

(For off-road Bicycle Path Warrants, see Section 17-2.02(a)).

17-1.04 Determining Bicycle Travel Demand

The concepts of identifying cycling origins and destinations, and thus travel demand, are discussed in the FHWA publication *Selecting Roadway Design Treatments to Accommodate Bicycles*. The following additional guidance is provided to determine bicycle travel demand where bicycle travel is difficult to predict:

1. Urban and Suburban Areas. Because of the potential for bicycle travel, bicycle accommodation will likely be warranted in the majority of urban and suburban areas, particularly at points of community development that generate, attract, or result in commercial, recreational, or institutional establishments near or along highways.

2. Rural Towns. Bicycle accommodation may be warranted in rural towns located on main highways where bicycle travel within the community and from the outlying populated areas could justify such accommodation.

3. Rural Highway Projects. Rural highway projects that provide unique access over a major barrier, such as a river, would be expected to meet the warrants.

4. Unpopulated Rural Areas. In unpopulated rural areas, typical origins and destinations are far less frequent. Thus, the need for bicycle accommodation may not be warranted.

17-1.04(a) Assessment of Bicycle Travel Within Highway Projects

Bicycle origins and destinations should be reviewed for each project and noted in a checklist format. All checklists are in the Section 17-6. Such information provides the basis for evaluating whether or not bicycle accommodation is necessary within a project. This section provides two checklists, an example map, and a travel assessment form that should be included in all Phase I reports, except for projects excluded in Section 17-1.02(a). If projects include accommodation for bicycles, notify BDE's Bicycle Coordinator. If bicycle accommodations will be excluded from the project, complete and include, in all applicable Phase I reports, the forms presented in Figures 17-1A, 17-1B, and 17-1C.

17-1.04(b) Bicycle Travel Generators in Project Vicinity

Review and record the potential bicycle travel generators in the vicinity of the project, such as those shown in the checklist in Figure 17-1A. Note on the checklist the types of generators within 1 mile (2 km) of the project corridor. To the Phase I Report, attach a map of this area showing the general location of these generators as illustrated in Figure 17-1B. Sections of Municipal or Township maps are acceptable, as well as photocopies of aerial photos. The map will serve to indicate where bicyclists will cross or ride along the corridor. It will also serve to indicate the absence of any of the destinations presented in Figure 17-1A and, thus, provide justification for excluding bicycle accommodation.

17-1.04(c) Public Coordination

The organizations presented in Figure 17-1C shall be contacted to assess any nearby bicycle travel or planned development of recreational trails or other generators. Include documentation of coordination in the Phase I report.

Generators	Yes	NA	Generators	Yes	NA
Residential Areas	☐	☐	Shopping Centers	☐	☐
Parks	☐	☐	Hospitals	☐	☐
Recreation Areas	☐	☐	Employment Center	☐	☐
Churches	☐	☐	Government Offices	☐	☐
Schools	☐	☐	Local Businesses	☐	☐
Libraries	☐	☐	Industrial Plants	☐	☐
Existing Bicycle Trails	☐	☐	Public Transportation Facilities	☐	☐
Planned Bicycle Trails	☐	☐	Other ( )	☐	☐

CHECKLIST FOR BICYCLE TRAVEL GENERATORS IN PROJECT VICINITY

Figure 17-1A

17-1.04(d) Bicycle Travel Assessment

Based on the bicycle travel indicators presented in Sections 17-1.04(b) and 17-1.04(c), address the questions in the bicycle travel assessment form (see Figure 17-1D) and attach the completed form to the Phase I report.

17-1.05 Maintenance and Jurisdiction

Responsibility for ongoing maintenance of bikeway facilities within the roadway surface is assumed to be an integral part of roadway maintenance.

Responsibility for maintenance of bikeway and pedestrian facilities separated from the roadway surface should be delegated by Agreement with local/State jurisdictions or others early in the planning process (see Chapter 5).

17-1.06 Right-of-Way

Acquire right-of-way for bikeway facilities in accordance with existing IDOT land acquisition policies and procedures. Additional right-of-way required for bikeway purposes should be purchased in conjunction with the right-of-way purchase of the overall roadway improvement.

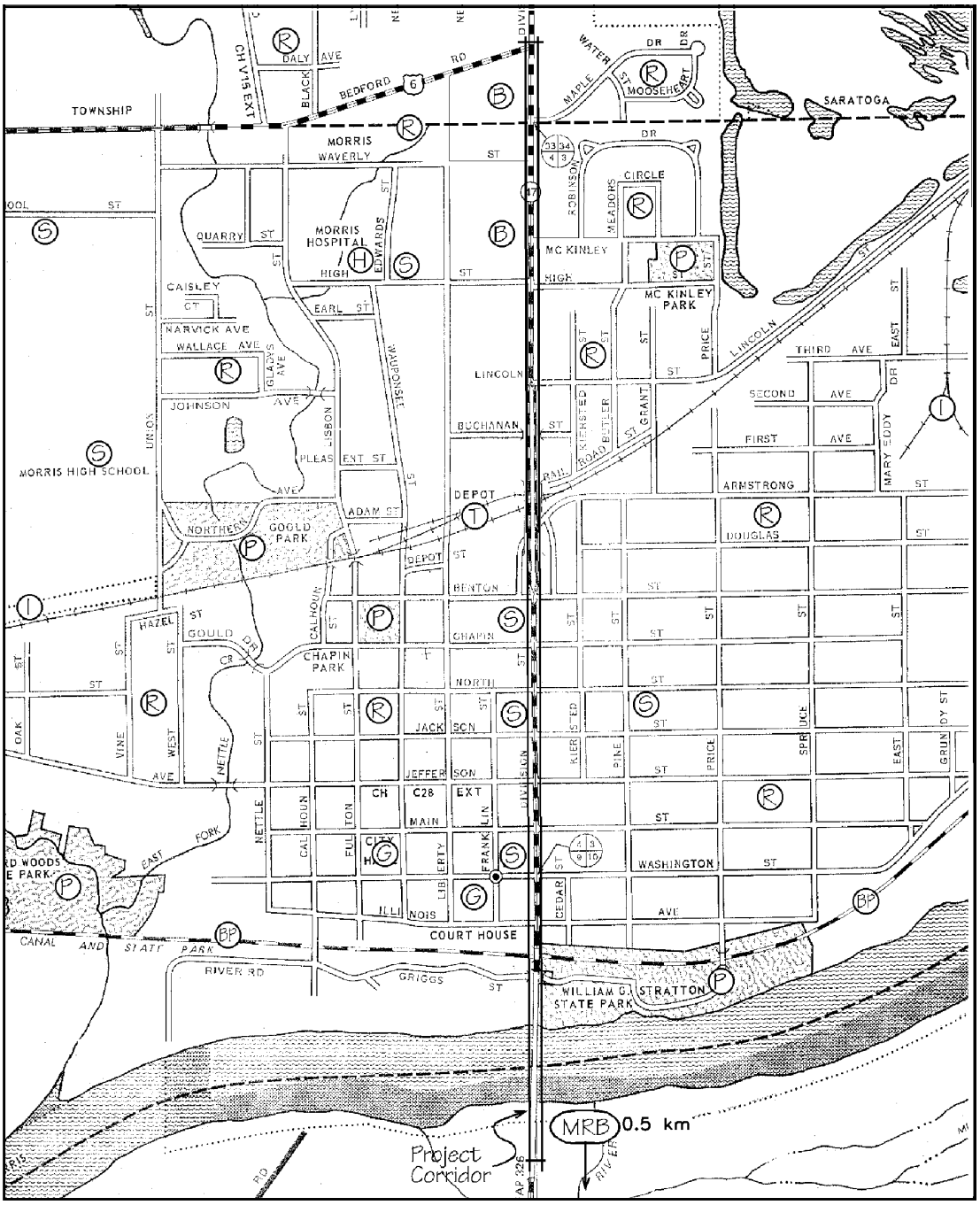

R	Residential Areas	BP	Existing Bicycle Trails	G	Government Offices
P	Parks	PBP	Planned Bicycle Trails	B	Local Businesses
P	Recreational Areas	M	Shopping Centers	I	Industrial Plants
C	Churches	H	Hospitals	T	Public Transit Facilities
S	Schools	E	Employment Centers	O	Other

EXAMPLE OF MAP TO ACCOMPANY CHECKLIST FOR BICYCLE TRAVEL

Figure 17-1B

Organization	Yes	NA	Organizations*	Yes	NA
Metropolitan Planning Organization (if applicable)	☐	☐	League of Illinois Bicyclists*	☐	☐
Local Municipalities	☐	☐	Illinois Department of Natural Resources*	☐	☐
Park or Forest Preserve Districts	☐	☐	Illinois Trails Conservancy*	☐	☐
Sub-Regional Planning Council (as appropriate)	☐	☐	Chicagoland Bicycle Federation (District 1 only)*	☐	☐

**Note: Addresses are presented in Section 17-5.*

CHECKLIST FOR ORGANIZATIONS AND PUBLIC COORDINATION

Figure 17-1C

17-1.07 Funding

Bicycle facilities intended for transportation purposes, which are necessary for the safe travel of bicyclists within an improvement corridor, are considered an integral part of a highway project for Federal funding purposes, and thus are eligible for Federal cost participation. If conditions within the roadway prohibit the inclusion of adequate bicycle accommodation, necessary off-roadway accommodations may be included within the overall improvement cost-sharing formula.

Accommodations beyond those which are determined necessary from the travel demand analysis in Section 17-1.04, but may be desired or preferred by local officials, could be funded through several options as follows:

- initiated by others than IDOT and submitted as a candidate for the Transportation Enhancement Program funding (see Chapter 18);
- initiated by others than IDOT and submitted for consideration from other appropriate TEA-21 funding categories, such as the Congestion Mitigation and Air Quality (CMAQ) or various Surface Transportation Program (STP) categories;
- considered on a cost-shared basis, similar to the current IDOT sidewalk policy; or initiated by others than IDOT and funded entirely through outside governmental organizations.

Route _____
Section _____
County _____

1) Where would bicyclists cross the project?	
2) Where would bicyclists need to ride parallel to the project?	
3) Does the project provide unique or primary access (see Note 1): • Across a river, railroad, highway corridor or other natural or man-made barrier?	
• Into or out of a residential or commercial development?	
• Between communities or other likely significant destinations — such as a university campus or recreation facility?	
4) Are there any secondary roads parallel to the project that could reasonably be used by cyclists as alternates to access these destinations (see Note 2)?	
If so, how far from the corridor are these roads? (A key consideration with parallel roads is whether there are significant destinations located on the project corridor that bicyclists would need to access.)	
5) Do local governmental entities or other organizations have plans for bicycle facilities or generators, such as a park or recreational area that could affect this project or generate additional travel in the project corridor?	

Notes:

1. *Unique or primary access is defined as access that is not otherwise available within a reasonable riding distance of 1 mile (2 km).*

2. *Secondary roads that could be used as alternate routes are usually within 2-3 blocks of projects in urban areas, within 0.5 miles (1 km) in suburban areas, and within 1 mile (2 km) in rural areas.*

FORM FOR BICYCLE TRAVEL ASSESSMENT

Figure 17-1D

17-2 DESIGN CRITERIA FOR BICYCLE FACILITIES

The Department utilizes the AASHTO publication *Guide for the Development of Bicycle Facilities* as the basis for design guidance. Further guidance is provided in the FHWA publication *Selecting Roadway Design Treatments to Accommodate Bicycles.* Also, coordinate bicycle facility design with the cross section criteria presented in Part IV, "Roadway Design Elements," (Chapter 39) and Part V, "Design of Highway Types."

17-2.01 On-Road Accommodations

17-2.01(a) On-Road Bikeways on Rural Roadways

Bicycle accommodation on rural cross sections consists of paving a portion of the shoulder. Paved shoulders can accommodate most types of bicycle travel very efficiently and offer benefits beyond accommodating bicyclists (e.g., added safety, reduced maintenance, rural mail delivery). See Figure 17-2A for width criteria.

Vehicular ADT (current)	**Bicycle ADT ≥ 25 (projected) (1)**
Under 1000	1 ft (300 mm) (2)
1000 to 2999	4 ft (1.2 m)
3000 or more	4ft – 6 ft (1.2 m - 1.8 m) (3)

Notes:

1. *Estimate bicycle ADT according to Section 17-1.04.*
2. *This value reflects 3R criteria.*
3. *Paved shoulder width should be increased to 6 ft (1.8 m) as follows:*
   - *where posted speeds are 55 mph or greater, or*
   - *where posted speeds equal or exceed 45 mph in areas with high truck, RV, or bus traffic or where usage by inexperienced bicyclists is expected.*

Where rumble strips are used, the paved shoulder should be sufficiently wide to provide a minimum 3 ft (1 m) smooth width to the outside of the rumble strip.

MINIMUM PAVED SHOULDER WIDTHS TO ACCOMMODATE BICYCLES ON RURAL CROSS SECTIONS

Figure 17-2A

Transitions from rural sections into urban sections (e.g., driveway entrances, intersections) should accommodate bicyclists' through movements by providing additional curb lane width to the curb and gutter section. Figure 17-2B illustrates an acceptable approach.

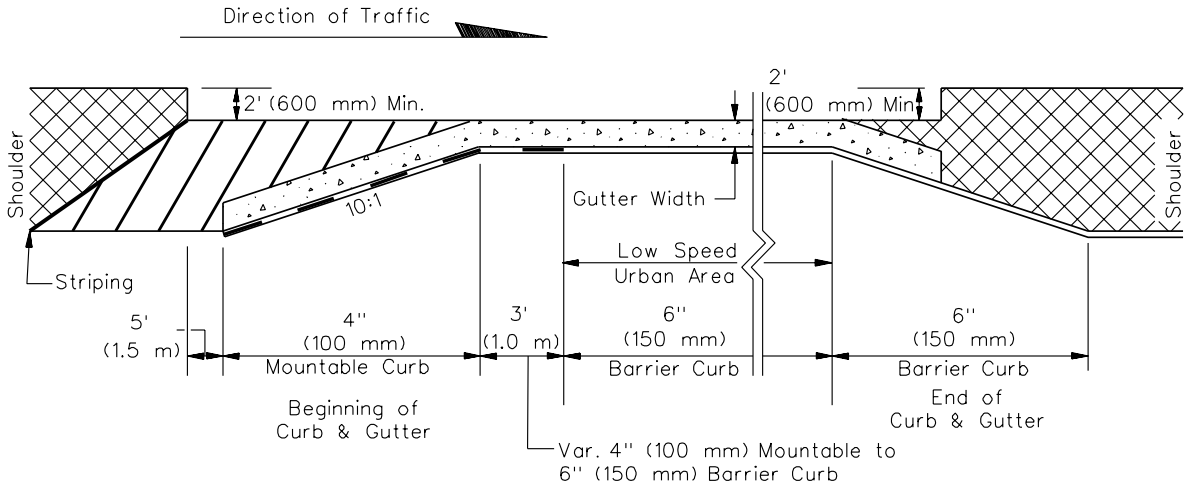

PAVED SHOULDER TRANSITION INTO CURB AND GUTTER

Figure 17-2B

Avoid using rumble strips on shoulders where bicycles are allowed to operate (see Chapter 34). When rumble strips are warranted to address a high-crash location or a history of run-off-the-road crashes, and there is a need to accommodate bicycle travel, provide a minimum 3 ft (900 mm) smooth paved area to the outside of the rumble strip as per the *Highway Standards*. The design should be coordinated with and approved by BDE.

17-2.01(b) On-Road Bikeways On Shared Urban Roadways

On a shared roadway facility, bicyclists and motorists share the same travel lanes without a striped separation. Minimum cross sections are shown in Figure 17-2C. Shared roadways have particular application where physical constraints such as buildings, narrow sidewalks, or environmentally sensitive areas prevent widening a street to provide bike lanes.

Wide curb lanes usually are the most effective and efficient means of accommodating bicycle travel in urban roadway sections. The width of the lane is the most important factor for allowing vehicles sufficient room to pass a slower-moving bicyclist. As speeds increase or as the percentage of truck traffic increases, the width should increase according to the criteria presented in Figure 17-2C. Measure the width of the lane from the lane stripe to the joint between the pavement and the gutter. If no joint exists, as with monolithic pavement, take the measurement to the face of the curb. Bicycles, because of their narrow tires, cannot be expected to be ridden on or near a longitudinal pavement joint because of the potential for catching the wheel in the joint and throwing a rider into traffic.

TWO-LANE ROADWAYS WITH WIDE LANES
(Posted Speed < 45 mph)

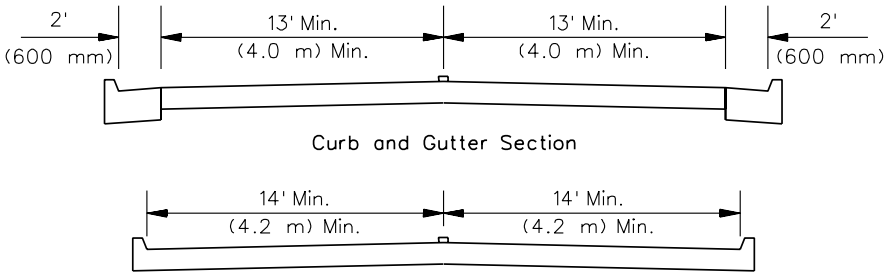

TWO-LANE ROADWAYS WITH WIDE LANES
(Posted Speed = 45 mph)

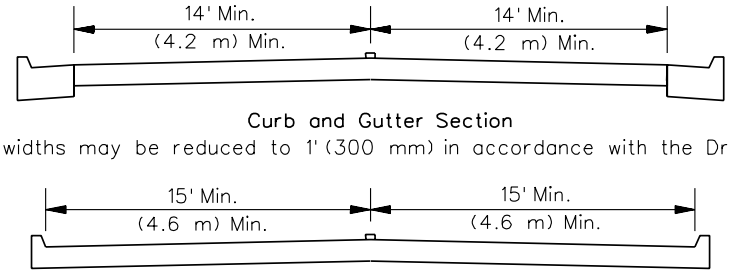

Note: Gutter widths may be reduced to 1' (300 mm) in accordance with the Drainage Manual.

FIVE-LANE SECTIONS

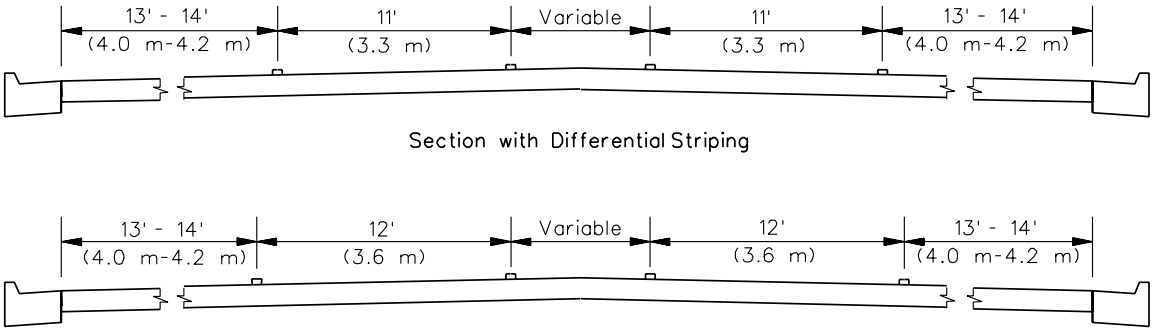

MINIMUM CROSS SECTIONS FOR SHARED URBAN ROADWAYS
(Unmarked Bicycle Lanes)
Figure 17-2C

Gutter widths are not considered acceptable for bicycle travel. A bicyclist riding in the gutter is often forced to leave this area because of debris or broken pavement. If the pavement/gutter joint is vertically uneven or has separated from the gutter, a bicyclist can become trapped and forced to make unsafe maneuvers.

17-2.01(c) On-Road Marked Bicycle Lanes on Urban Roadways

Bicycle lanes that are marked on curbed streets serve to separate bicycle traffic from motor vehicle traffic. The provision of marked bike lanes may be considered appropriate if any of the following conditions exist:

- A combination of speeds (i.e., posted 45 mph or less) and high vehicular traffic volumes exist, especially on roadways with high truck, RV, or bus traffic (refer also to *Selecting Roadway Design Treatments to Accommodate Bicycles*).

- The bicycle lanes provide a linkage to a continued marked bikeway along or at either end of the project.

- The roadway provides a key linkage to a destination, such as a college or recreational area, which will be frequented by casual bicyclists.

The following are minimum cross section requirements:

- On curbed streets without parking, locate the bicycle lane next to the gutter, as shown in Figure 17-2D.

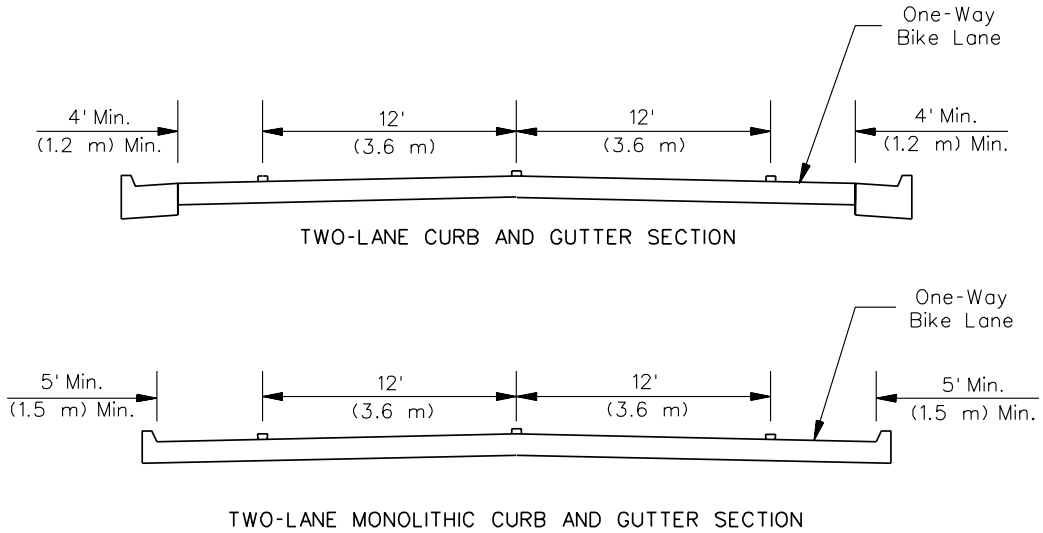

MINIMUM CROSS SECTIONS FOR CURBED STREETS WITHOUT PARKING
(Marked Bicycle Lanes)

Figure 17-2D

- Where parking is permitted, locate the bicycle lane between the parking lane and the through traffic lanes as shown in Figure 17-2E.

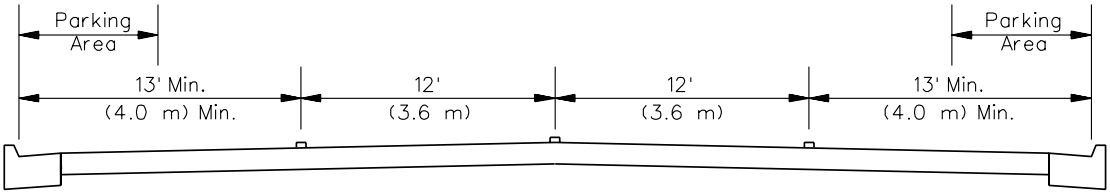

TWO-LANE SECTION WITH
COMBINED BICYCLE AND PARKING USE AREAS
(Unmarked Bicycle Use Area)

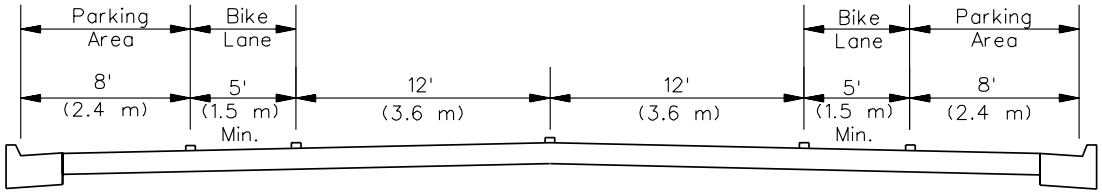

TWO-LANE SECTION WITH
MARKED PARKING
(Marked Bicycle Lanes)

MINIMUM CROSS SECTIONS FOR CURBED STREETS WITH PARKING

Figure 17-2E

- Where parking is allowed on a street, provide additional parking-lane width, above the required minimum, under the following conditions:

  + where there is frequent parking turnover,
  + where parked vehicles are mostly commercial vehicles, or
  + where posted motor vehicle speeds equal 45 mph.

Design bicycle lanes as one-way facilities that carry bicycle traffic in the same direction as adjacent motor vehicle traffic. Two-way bicycle lanes on one side of the roadway (without physical separation) are unacceptable because they promote riding against the flow of motor vehicle traffic. Wrong-way riding is a major cause of bicycle crashes nationally and violates the *Illinois Vehicle Code* (625 ILCS 5/11-1505). Locate one-way bicycle lanes that are on one-way streets on the right side of the street, except in areas where placing the bicycle lane on the left will decrease the number of conflicts (e.g., those caused by heavy bus traffic).

Place bicycle lanes that are adjacent to dedicated bus lanes between the vehicular traffic lane and the bus lane as shown in Figure 17-2F. Where roadway width is limited, bicycles and buses may share an outside lane with a minimum width of 16.5 ft (5 m) to the curb face.

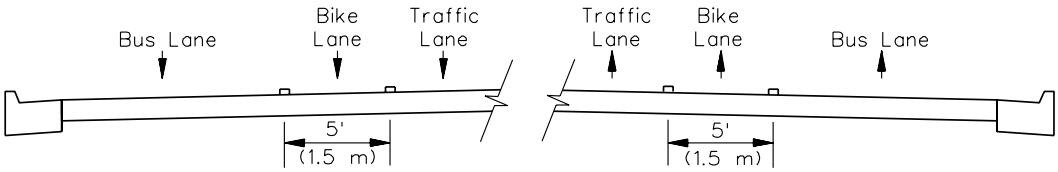

BICYCLE LANES ADJACENT TO BUS LANES

Figure 17-2F

17-2.01(d) Intersections

On-road bicycle movements through intersections should be an integral part of a roadway improvement. As practical, continue existing wide curb lanes through intersections to accommodate bicycle through movements. If right- or left-turn bicycle movements are expected, provide adequate turn-lane widths to allow bicyclists to share the lane with turning vehicular traffic. When an approach roadway in a rural section transitions into an urban intersection, use the criteria presented in Section 17-2.01(a).

Bicycle lanes on an intersection approach should be continued through the intersection as shown in Figure 17-2G. When width for a separate lane is unavailable, actual bicycle movements are likely to follow those shown in Figure 17-2H. Traffic-tolerant cyclists will generally mimic vehicular movements and traffic-intolerant cyclists will generally mimic pedestrian movements.

Different approaches to accommodating bicycle traffic through intersections are necessary as the level of vehicular traffic and speeds through the intersection increase. Accommodating bicyclists through a free-flow interchange may be of concern, due to possible safety issues; consider providing a separate structure for bicyclists and pedestrians. However, if on-road accommodation is necessary, the design shown in Figure 17-2I reflects an acceptable approach to directing bicyclists across interchanges. Other designs may need to be considered to meet the requirements of individual intersections/interchanges.

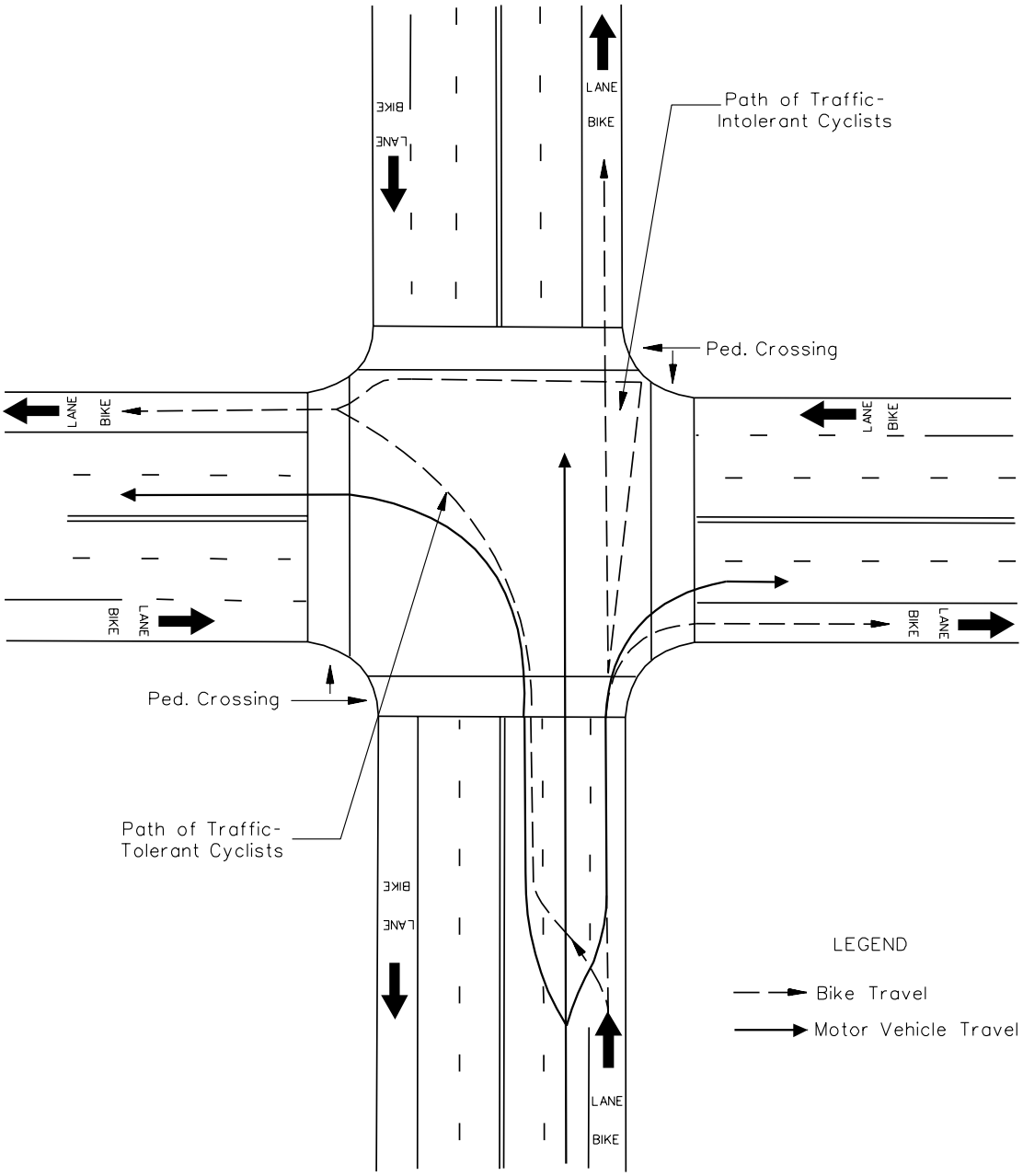

TYPICAL BICYCLE MOVEMENTS AT INTERSECTIONS ON MULTI-LANE STREETS WITH BICYCLE LANES

Figure 17-2G

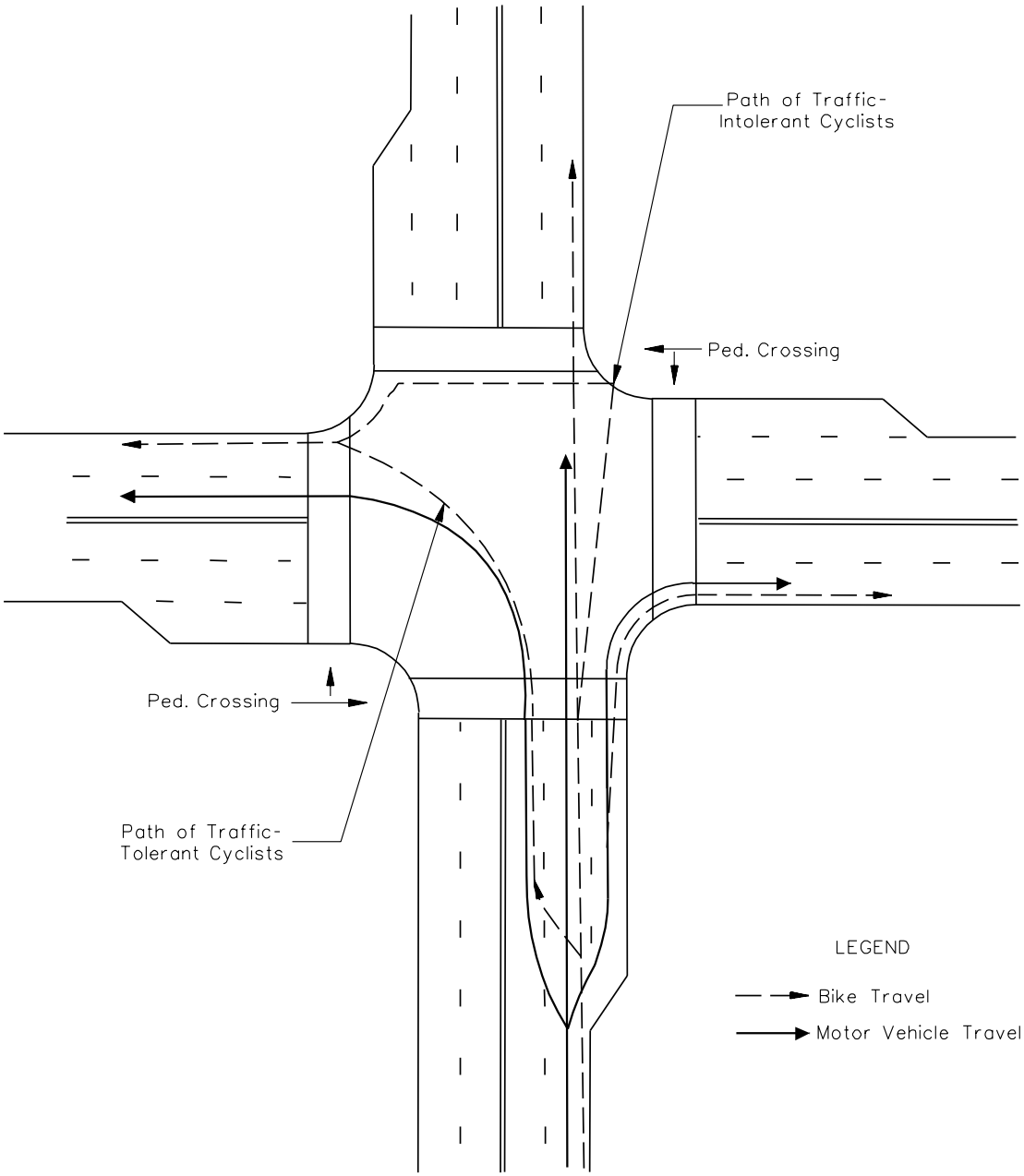

TYPICAL BICYCLE MOVEMENTS AT INTERSECTIONS ON MULTI-LANE STREETS WITHOUT BICYCLE LANES

Figure 17-2H

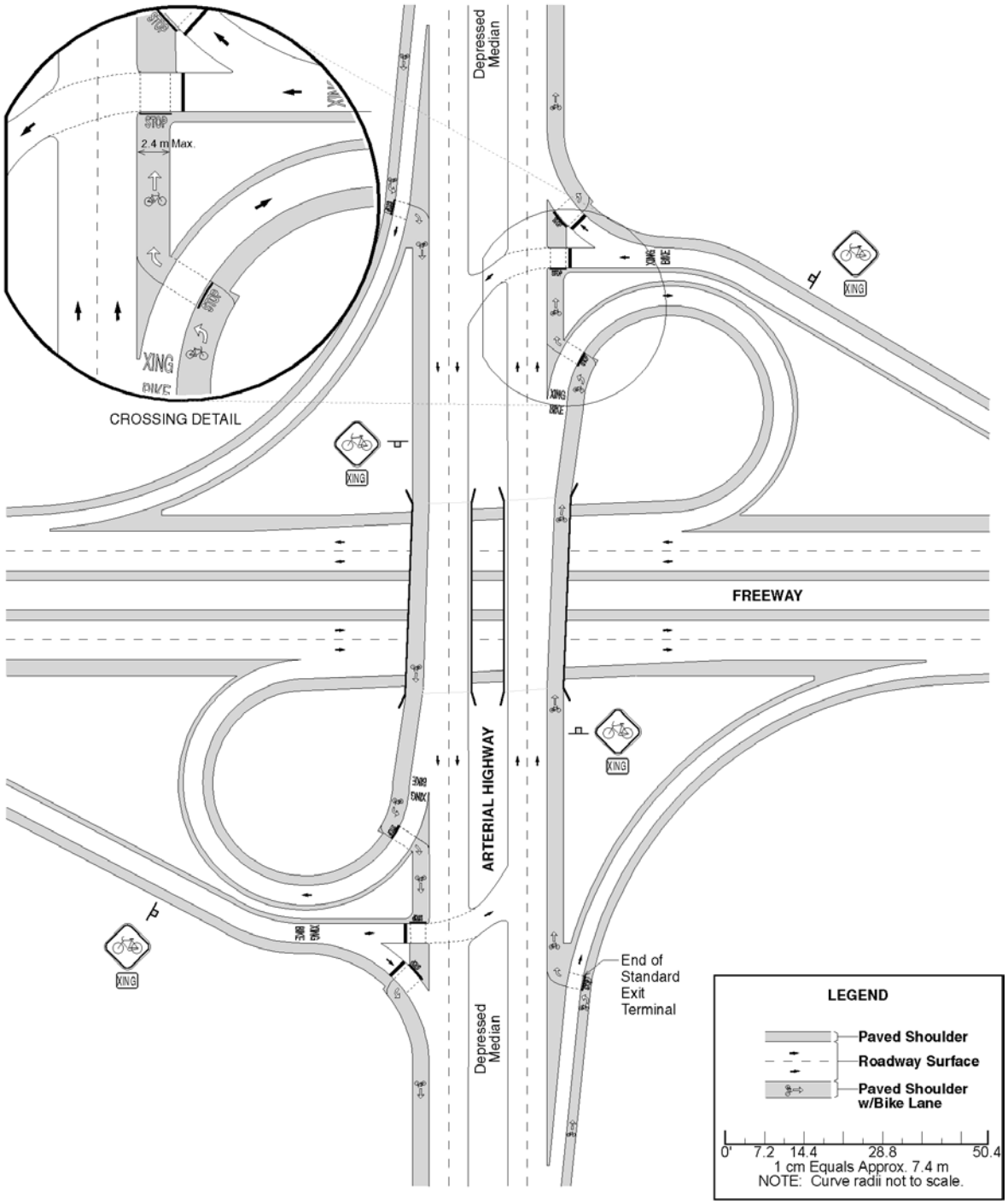

BIKE LANES ACROSS HIGHER SPEED INTERCHANGES

Figure 17-2I

17-2.01(e) Bikeway on Highway Structures

Bicycle accommodations on approach roadways should be carried across structures. The width of new highway structures should, at a minimum, equal the width of the traveled way plus the width of approaching bicycle lanes and/or sidewalks. Minimum cross sections for roadways and structures will vary significantly depending on the type of bicycle facility being accommodated. Several examples of minimum cross sections for shared roadways, bicycle lanes and bicycle paths are shown in Figures 17-2J through 17-2L. In addition, the criteria for accommodating bikeways at or near bridges along freeways and expressways are illustrated in Figure 17-2M. Figure 17-2N presents a typical modification of existing facilities for bikeways under a bridge.

Where it is necessary to retrofit a separated bicycle path (see Section 17-2.02) onto an existing highway bridge, several alternatives should be considered in light of what the geometrics of the bridge will allow. One option is to carry the bicycle path across one side of the structure. This should be considered where:

- the bridge facility will connect to a bicycle path at both ends,
- sufficient width exists on that side of the bridge or can be obtained by widening or restriping lanes, and
- provisions are made to physically separate bicycle traffic from motor vehicle traffic.

Another option is to use existing sidewalks as one-way or two-way facilities. This may be advisable where:

- conflicts between bicyclists and pedestrians will not exceed tolerable limits, and
- the existing sidewalks are adequately wide.

If the facility cannot provide adequate accommodation (per widths indicated in this section), appropriately sign the facility to warn users of the deficiencies or require bicyclists to dismount and cross the structure as a pedestrian. Section 17-2.02(i) provides additional design guidance for structures on bicycle paths. The AASHTO *Bridge Manual* specifies a 4′-6″ (1.4 m) outside railing height. Design on-road bicycle accommodations accordingly. Bridge railing on off-road-shared-use paths must meet a 3′-6″ (1.1 m) minimum rail height requirement.

Where bridge projects include bikeway or sidewalk accommodations, the approaches to the structure should ensure a usable facility by continuing the accommodation to logical termini.

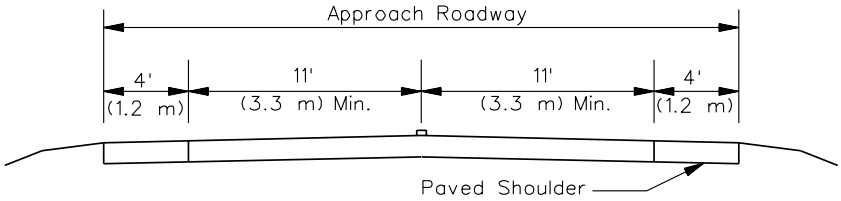

TWO-LANE ROADWAY WITH PAVED SHOULDERS

Note: Shoulder width should be increased to 6' (1.8 m) with conditions indicated in Figure 17-2A.

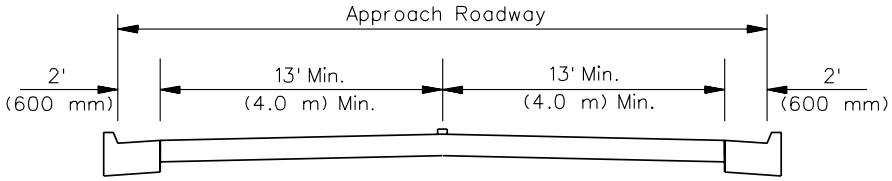

TWO-LANE URBAN ROADWAY WITH WIDE LANES

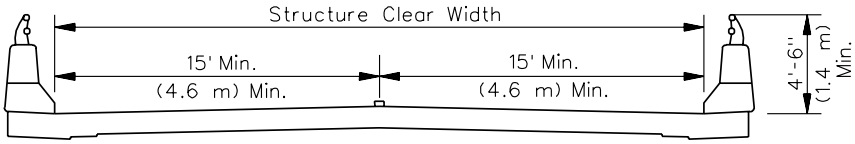

WIDE LANES/SHOULDERS CONTINUED ACROSS STRUCTURE

CROSS SECTIONS FOR SHARED ROADWAY ON TWO-LANE HIGHWAY STRUCTURES (Unmarked Bicycle Lanes)

Figure 17-2J

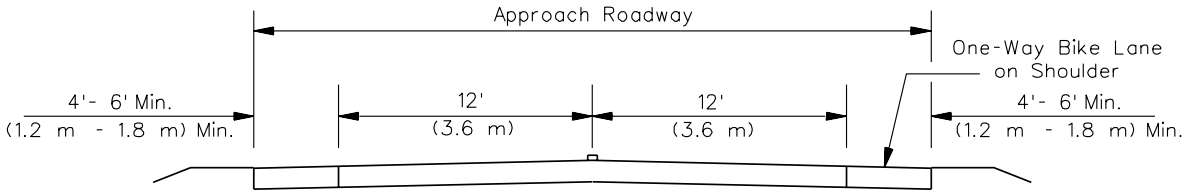

BIKE LANES ON SHOULDERS

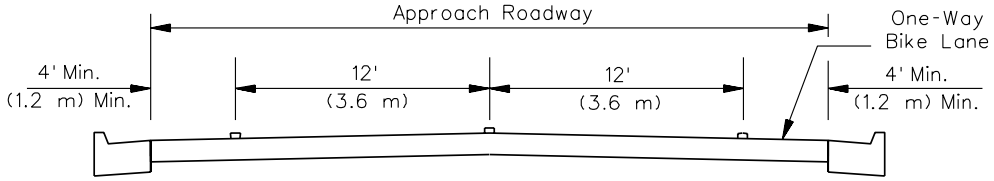

BIKE LANES ON ROADWAY

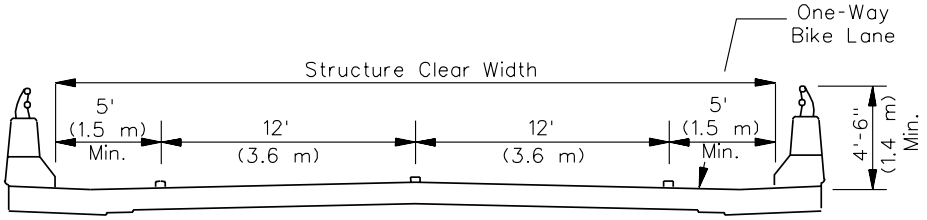

BIKE LANES ACROSS STRUCTURE

CROSS SECTIONS FOR MARKED BIKE LANES ON TWO-LANE HIGHWAY STRUCTURES

Figure 17-2K

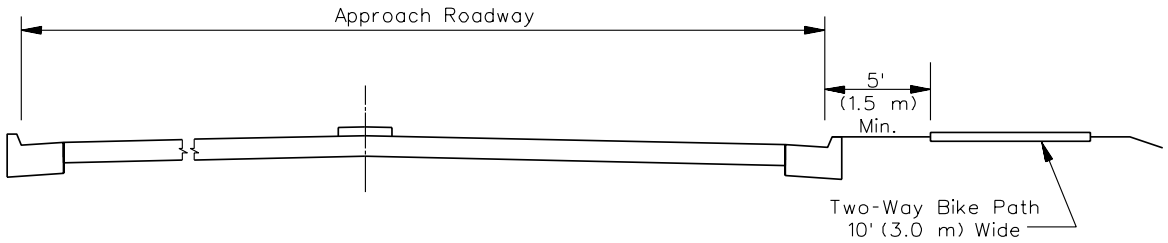

APPROACHING FOUR-LANE SECTION
WITH ADJACENT TWO-WAY BIKE PATH

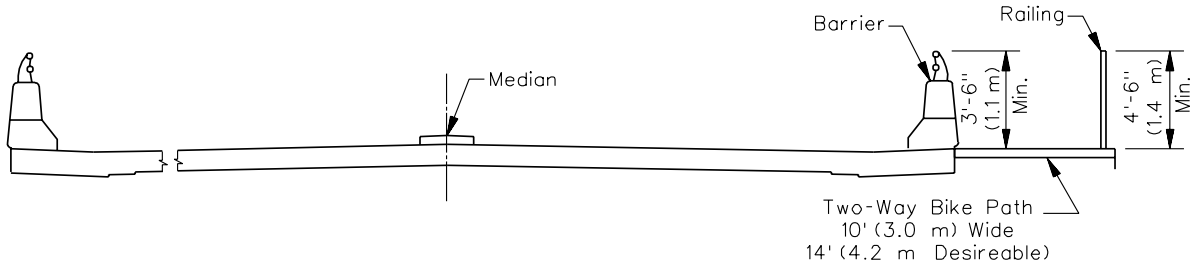

FOUR-LANE SECTION CONTINUED ACROSS
BRIDGE WITH INTEGRAL BIKE PATH

CROSS SECTIONS FOR BIKE PATHS ON FOUR-LANE HIGHWAY STRUCTURES

Figure 17-2L

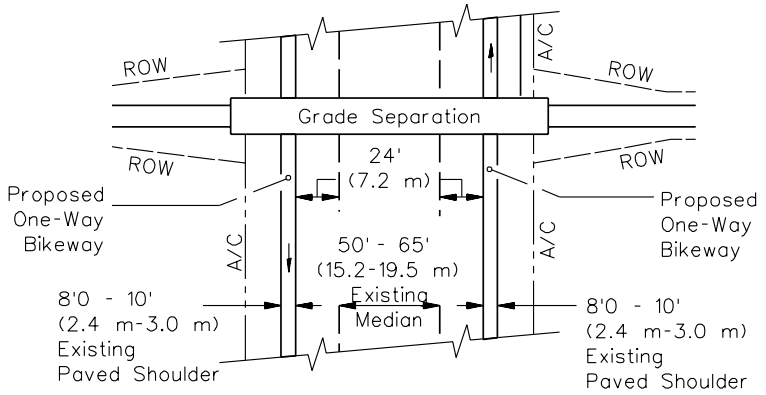

PLAN VIEW OF ONE-WAY BIKEWAY UNDER BRIDGE

(Note: Typical layout of one-way bikeway using outside shoulders of an expressway or freeway.)

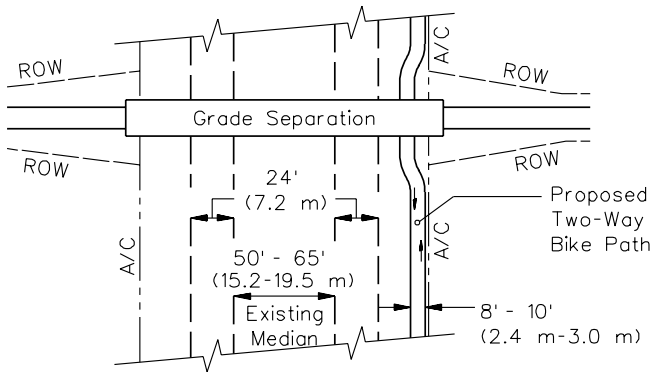

PLAN VIEW OF TWO-WAY BIKE PATH UNDER BRIDGE

(Note: Typical layout of two-way bike path adjacent to ROW line of an expressway or freeway.)

BIKEWAYS AT OR NEAR BRIDGES ALONG FREEWAYS OR EXPRESSWAYS

Figure 17-2M

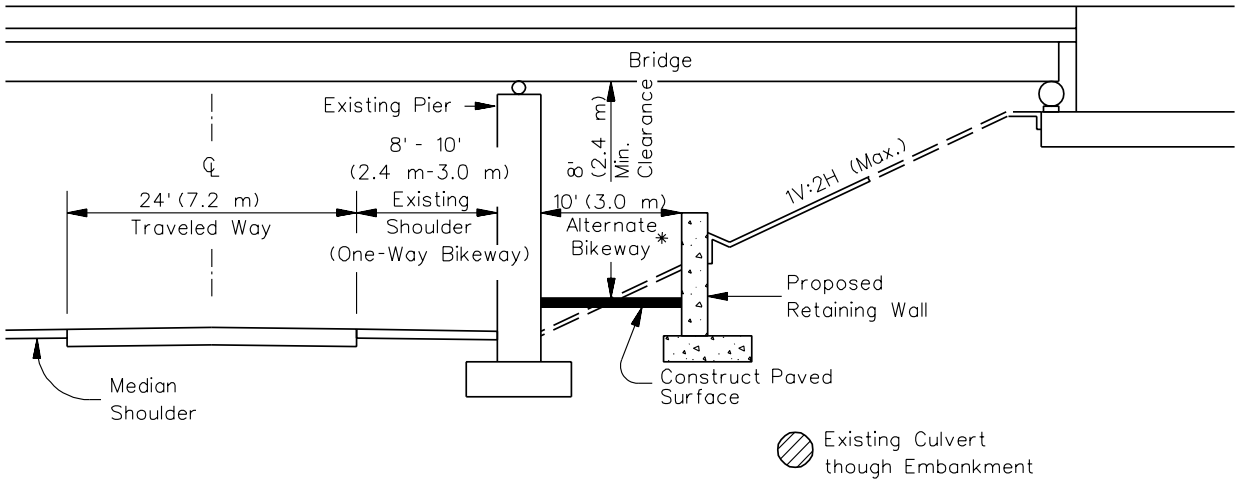

*Note: *Alternate bikeway is considered under bridge where separate two-way bike path is proposed within or adjacent to existing right-of-way line of a freeway or expressway.*

TYPICAL MODIFICATION OF EXISTING FACILITIES FOR BIKEWAYS UNDER A BRIDGE

Figure 17-2N

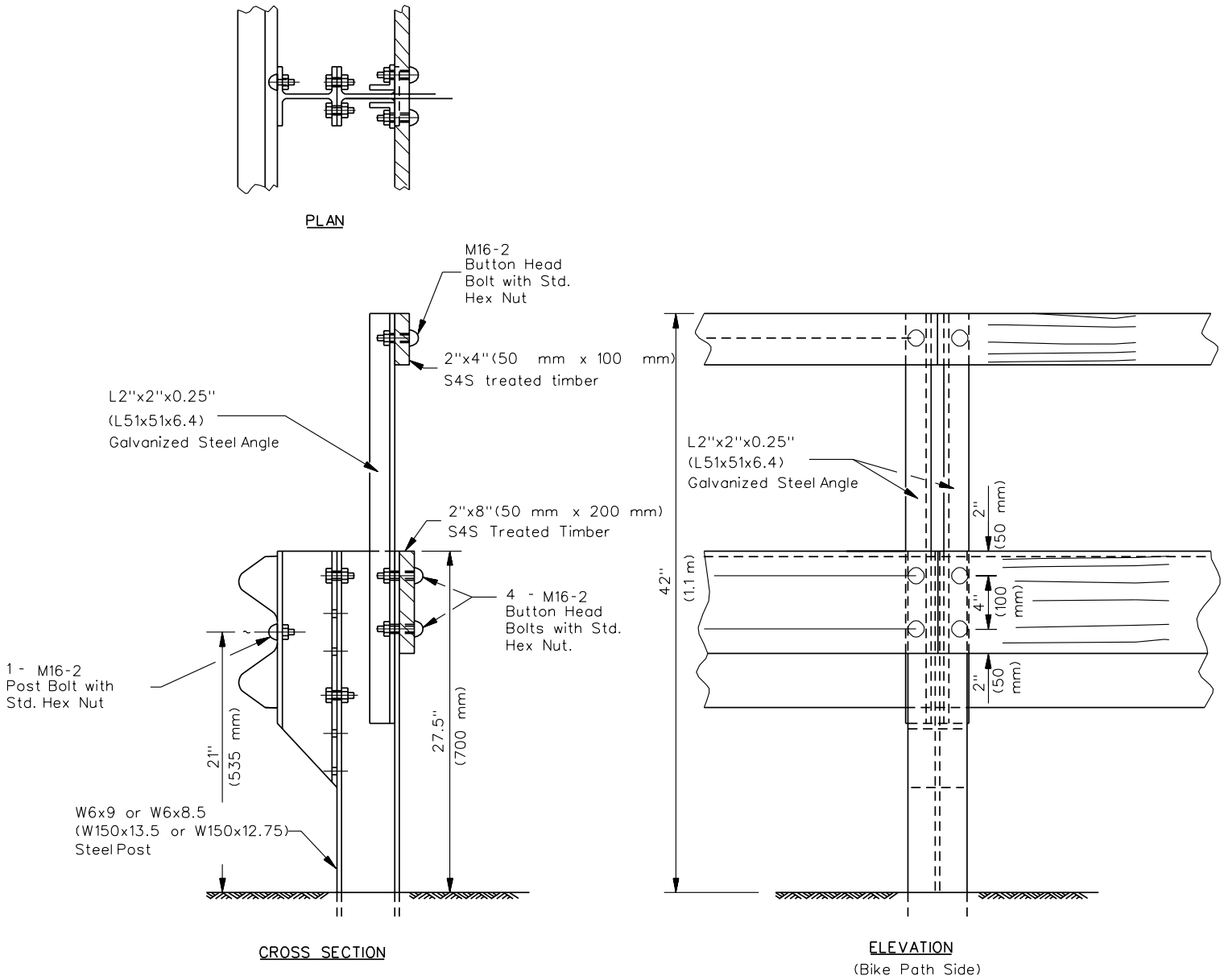

BIKE PATH APPROACH GUARDRAIL ADJUSTMENT

Figure 17-2O

17-2.01(f) Bikeway Adjacent to Highways

Railings or barriers, 3.5 ft (1.1 m) high, are required wherever a two-way bike path is proposed within 5 ft (1.5 m) of a roadway. In addition, approach guardrails should be extended to a 3.5 ft (1.1 m) height until the bike path is more than 5 ft (1.5 m) from the edge of the traveled way. The requisite extension on a standard guardrail to extend its height to 3.5 ft (1.1 m) is shown in Figure 17-2O. The width of the two-way bike path generally should be 10 ft (3.0 m), but widths should be adjusted according to Figure 17-2X in Section 17-2.02(d). Separation railings are not required when bicycle traffic flows in the same direction as vehicular traffic.

Railings and barriers that provide a separation between the roadway and a bike path are primarily intended to prevent the bicyclist from falling over the railing into opposing traffic. Thus, the type of railing provided is dependent on its proximity to vehicular traffic and its ability to deflect vehicular impacts. For example, railings located on top of a raised sidewalk edge will require an impact resistance different than railings located adjacent to the traffic lane. The designer of the railing also should consider sight impediments the railing might impose. Examples of such railings are shown in Figure 17-2P.

All vertical surfaces within a 2 ft (600 mm) clear area adjacent to the bicyclists' path should be smooth to avoid snagging of clothing or incurring abrasive injuries from contact with the surface. For example, protect the sharp edges of the backside of a guardrail located within 2 ft (600 mm) of the edge of a bikeway by smooth planking or rub rail as shown in Figure 17-2Q.

17-2.01(g) Additional Considerations for Accommodations on Existing Roadways

Bicycles also can be accommodated on a roadway by marking or re-marking the pavement to increase the width of the curb lane or to add bike lanes. For example, it may be feasible to:

- reduce the width of inside traffic lanes in accordance with IDOT and AASHTO criteria;
- reduce the median width, especially with the removal of raised curb medians, or the two-way center turn lane width;
- remove parking, possibly in conjunction with providing off-street parking;
- reduce the number of traffic lanes (e.g., if one-way couples are created or if a parallel roadway improvement reduces the traffic demand on an adjacent street that is more suited for bicycle travel); and
- where grades for on-road bicycle facilities exceed bike path grades in Figure 17-2AF, consider using signs to alert bicyclists of upcoming grades.

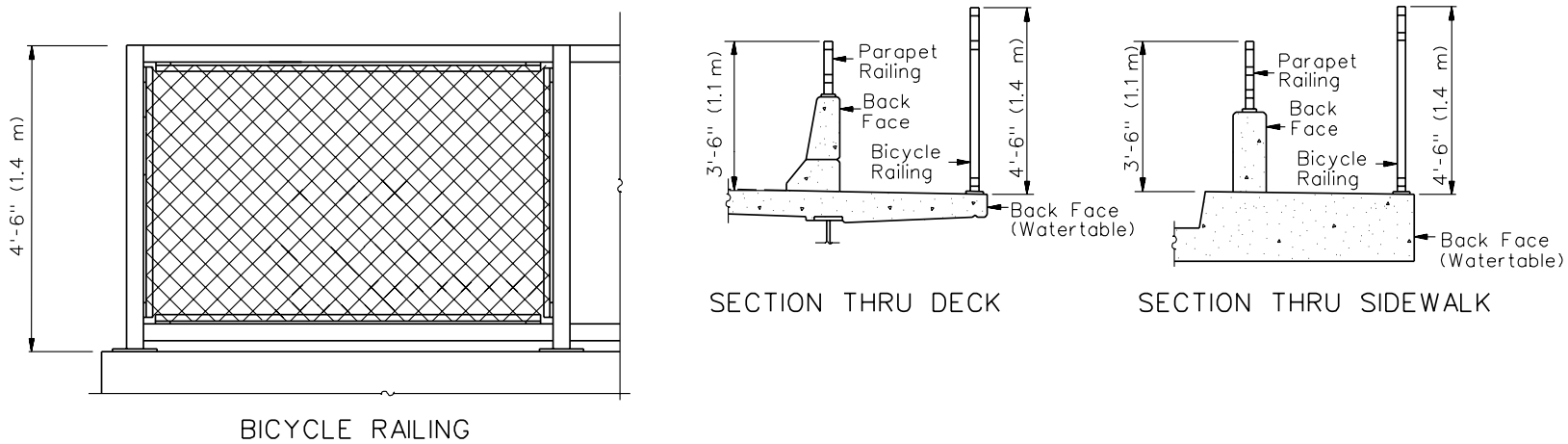

BICYCLE RAILING

Figure 17-2P

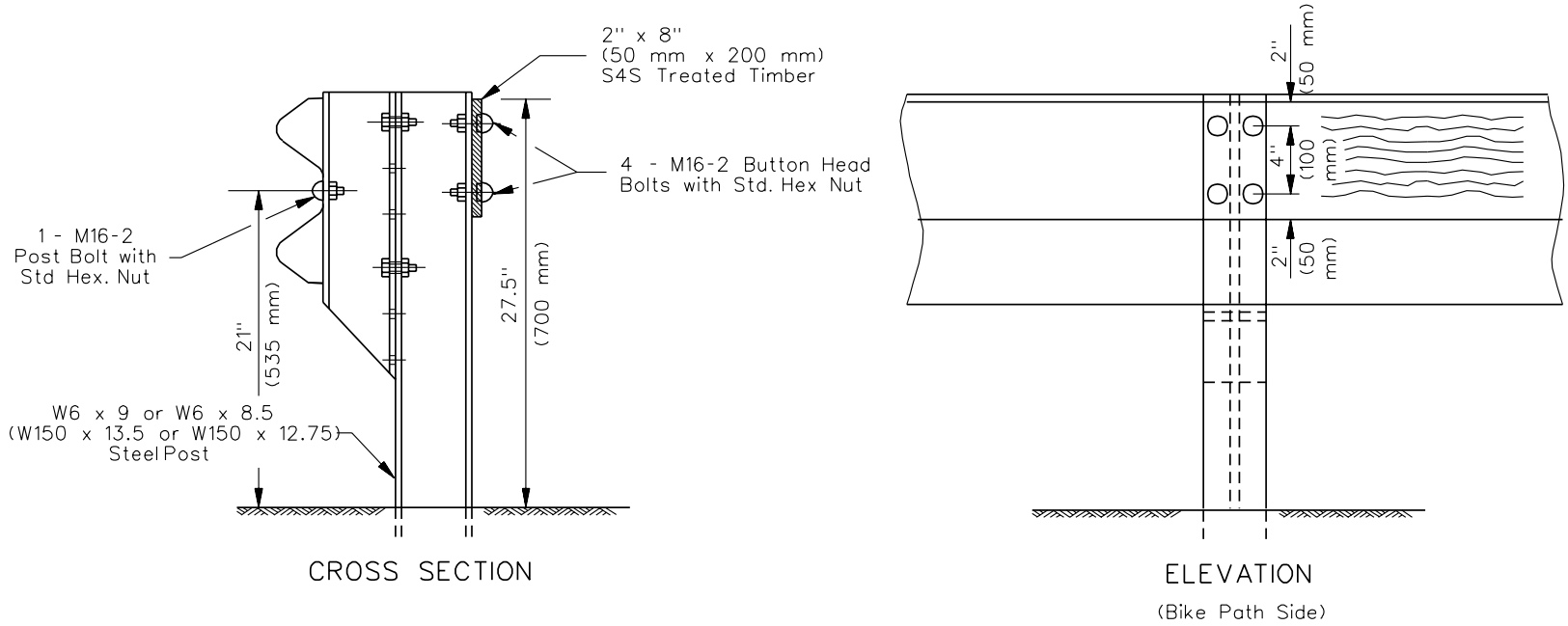

PROTECTION OF BACKSIDE OF GUARDRAIL

Figure 17-2Q

17-2.01(h) Incidental Design Factors

Regardless of the type of improvement being developed, the following items always should be considered:

1. Drainage Grates. Drainage grates and utility covers on roads, bridge approaches, and bridges can be hazardous to bicyclists. Bicycles often have narrow tires and no shock absorbent systems, and therefore are more sensitive to older elongated-slot style drainage inlets and irregularities on the pavement surface. Current IDOT drainage grate designs suitable for bicycle travel include Types 3, 3V, 4, 9, 10, 11, 11V, 23, and 24. Types 20, 21, and 22 are conditionally acceptable if the vane length is perpendicular to bicycle travel. Other grates are acceptable if the opening slots do not exceed 6¼″ L x 1½″ W. In addition, grates and utility covers located in the bicyclists' expected path should be flush with the pavement.

   With pavement overlay projects, replace utility covers and non-conforming drainage grates and adjust them flush with the new surface. Project limits may be extended within reasonable distances (i.e., one block or more) to replace additional non-conforming drainage grates that present obvious hazards to bicyclists.

2. Railroad Crossings. Bicyclists should be able to cross railroad tracks at or near a right angle to minimize the potential for a bicycle's front wheel to become trapped in the flangeway, which would cause loss of steering control. The potential for a bicyclist's front wheel to be trapped in the rail flangeway increases when the angle of approach deviates greatly (20 degrees) from 90 degrees. When the crossing angle is less than 45 degrees, consider widening the outside lane, shoulder, or bicycle lane to improve the angle of approach (see Figure 17-2R(a)). Where this is not practical, consider using commercially available compressible flangeway fillers, such as that shown in Figure 17-2R(b), to provide a smooth transition over the rails. Design the bicycle portion of the pavement surface so that it is the same elevation as the rails and consistent with the vehicular crossing surface. Remove abandoned tracks, if practical, to eliminate the hazard.

3. Pavement Structure Considerations. Consider the following factors related to pavement structures:

   a. Joints and Drop-Offs. In new construction, pavement surface irregularities can cause a bicyclist to lose control and result in a crash. Because bicycle tires may be as narrow as 1 in (25 mm), gaps between pavement slabs and gutters or drop-offs at overlays, especially parallel to the direction of travel, can trap a bicycle wheel and result in loss of control. This loss of control can cause a bicyclist to fall or swerve into the path of motor vehicle traffic. To the extent practical, pavement

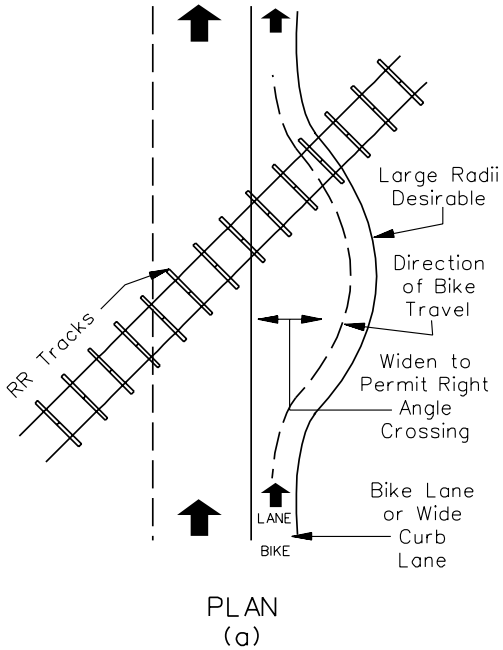

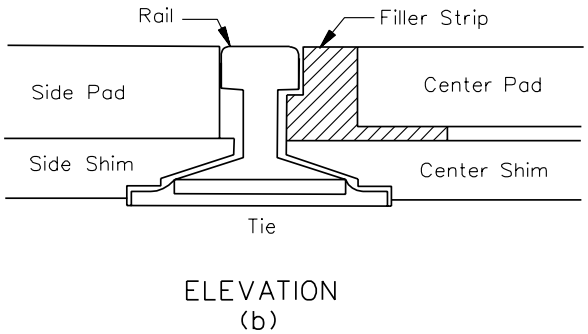

BIKE LANE CROSSING WITH RAILROAD

Figure 17-2R

surfaces should be free of irregularities and the edge of the pavement should be uniform in width. To assure pavement suitability, overlay projects should consider options to scarify the old pavement up to the gutter edge.

b. Rumble Strips. Where rumble strips are placed across the traffic lane in rural areas to warn motorists of upcoming traffic controls, provide a 3 ft (1.0 m) clear paved area on the paved portion of the shoulder to allow a bicyclist an opportunity to avoid the rumble strip.

c. Surface Type. Many rural roadways, because of their low traffic volumes, are very conducive to bicycling. When selecting the surface type and maintenance methods, consider the impacts on bicycle use. Particularly with oil and chip (A2/A3) surfaces, the aggregate specified should be a coarse aggregate, preferably CA 16, and care should be exercised to ensure that the surface is properly rolled and swept. Any loose stone allowed to accumulate on the outer edges of the roadway is extremely hazardous as it forces bicyclists to move toward the center of the roadway to avoid the hazard.

17-2.01(i) Bicycle Routes

It may be advantageous to sign some urban and rural roadways as bicycle routes, particularly if certain roadways provide preferred alternatives to heavily traveled highways. When providing continuity to other bicycle facilities, a bicycle route can be relatively short; however, a bicycle touring route can be quite long.

Base the decision whether to provide a bicycle route on the advisability of encouraging bicycle use on a particular road instead of on parallel and adjacent highways. Consider the roadway width and other factors (e.g., volume, speed, type of traffic, parking conditions, grade, sight distance) when determining the feasibility of a bicycle route.

Generally, bicycle traffic cannot be diverted to a less direct alternative route unless the favorable factors outweigh the inconvenience to the bicyclist. Roadway conditions such as adequate pavement width, drainage grates, railroad crossings, pavement smoothness, work schedules, and signal responsiveness to bicycles always should be considered before a roadway is identified as a bicycle route.

Bicycle route signing should not end at a barrier; rather, provide information signing to direct the bicyclist around the barrier. Further guidance on signing bicycle routes is provided in the *ILMUTCD*.

17-2.01(j) Signing, Marking, and Traffic Control

Signing, pavement markings, and traffic control for bicycle facilities will be in accordance with the criteria presented in the *ILMUTCD* and applicable local ordinances. For fully access controlled highway facilities, appropriate signing may be provided to prohibit bicycle access. Consult the District Operations Engineer and the District Bicycle Coordinator to determine appropriate signing, pavement marking, and traffic control requirements. Signing and pavement markings are especially important at the approaches to intersections and at bike lane termini. Where a bike lane ends, bicyclists may be required to merge with motor vehicle traffic. Bicyclists should be encouraged with the appropriate signing and pavement markings to make lane changes in advance of the intersection.

Not all bicycle accommodations or bikeways need to be or should be marked as bike routes. Generally, only bike lanes and bicycle paths should be marked as designated bicycle facilities. The following are some examples of what should not be marked:

- wide curb lanes that provide intermittent access to businesses along the route, but provide no connection to another part of a bike route; and

- any facility that does not meet minimum design criteria in the AASHTO publication *Guide for the Development of Bicycle Facilities*.

However, short segments of a continuous bike route that do not meet minimum criteria may be marked if the user is adequately warned of the conditions. For example, where a roadway serves as a bikeway and intermittent restrictions on width exist, such as at narrow bridges, mark these obstructions with both signing and pavement markings to warn bicyclists and motorists of the hazards (see Figure 17-2S).

At signalized intersections where frequent bicyclists need access to a green signal phase, a number of acceptable alternative methods are available including timed signals (where a cyclist must wait for the signal to change), traffic-actuated detectors, and push-button actuation. This opportunity (to access a green signal) should be provided where a marked bikeway crosses the project corridor. Other crossing locations to consider include potential bicycle travel from schools, parks, or other significant destinations described in Section 17-1.04(b).

Traffic-actuated detection should be sensitive to bicycles and should be located in the bicyclist's expected path, including left-turn lanes if necessary. Figure 17-2T(a) shows three recommended loop types for bicycle detection, each with particular advantages. Figure 17-2T(b) shows a pavement-marking stencil used to designate where a bicyclist should stand to activate the detector loop. The following information on bicycle detection should be considered:

1. Quadrupole Loop Detectors. The quadrupole loop detector functions best in a bicycle path or lane situation. In such a situation, the expected position of a bicyclist can be easily predicted. This loop is less sensitive over its outer wire than over its center wires and is also relatively insensitive to motor vehicle traffic in neighboring lanes.

2. Diagonal Quadrupole Loop Detector. The diagonal quadrupole loop detector functions best in shared-roadway situations where the position of a bicycle cannot be easily predicted. This detector is equally sensitive over its entire width and is relatively insensitive to motor vehicle traffic in neighboring lanes.

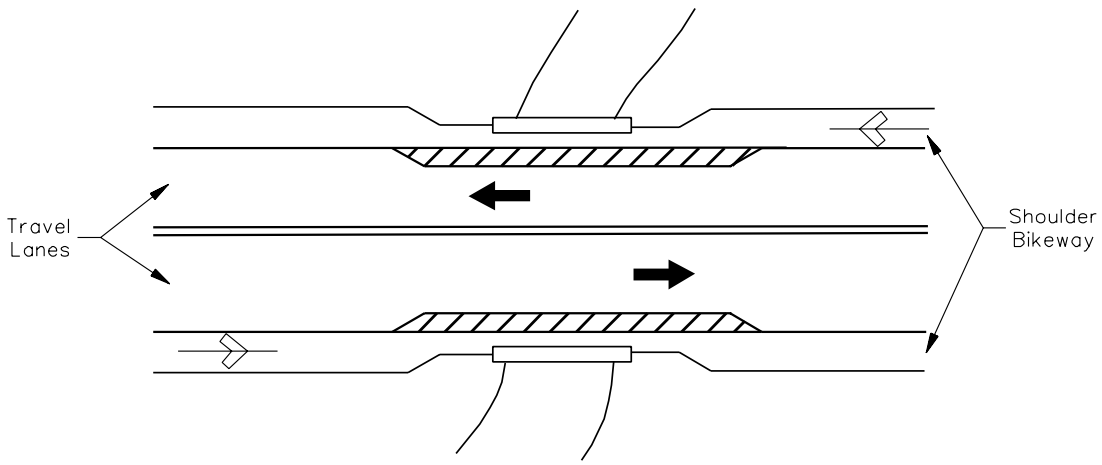

BICYCLE COMPATIBLE STRIPING FOR UNAVOIDABLE OBSTACLES

Figure 17-2S

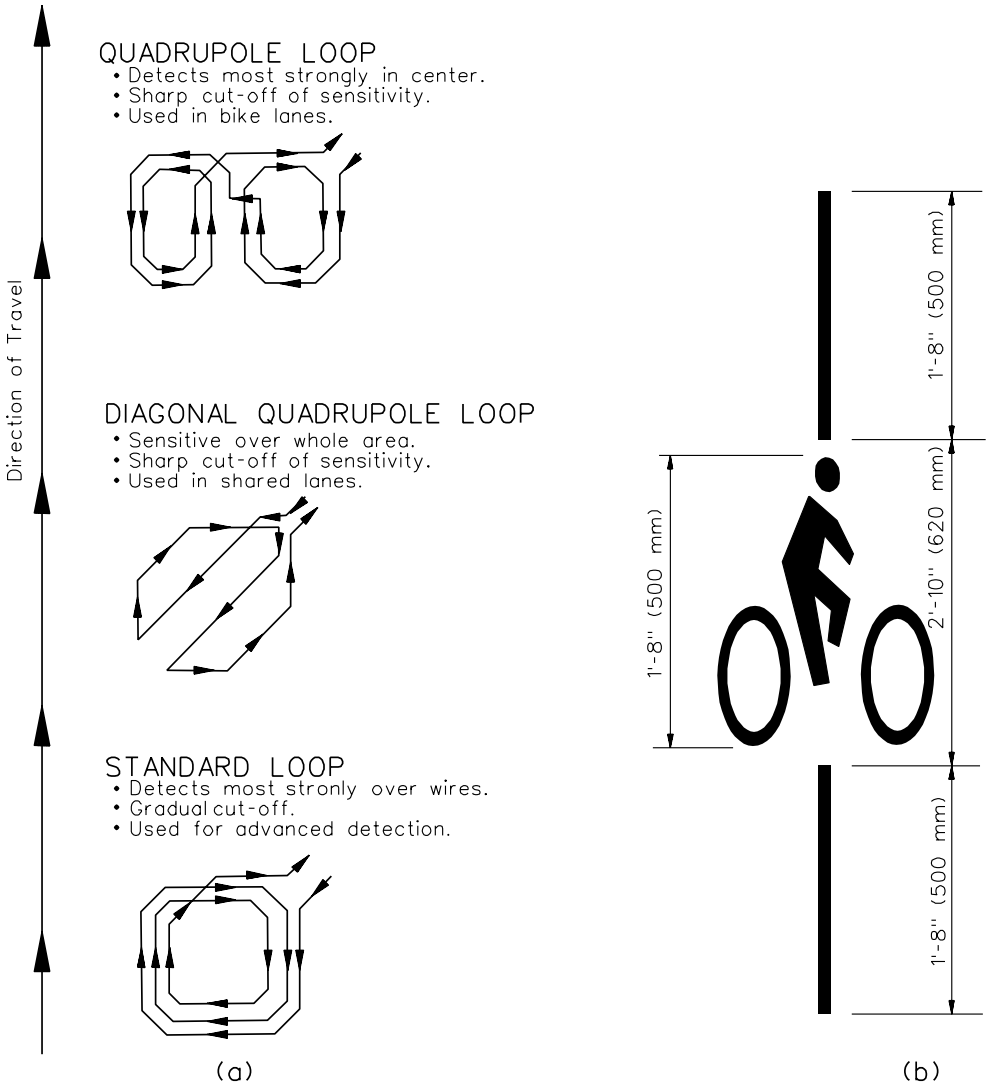

RECOMMENDED LOOP TYPES AND PAVEMENT MARKINGS FOR BICYCLE DETECTION LOOPS

Figure 17-2T

Signal timing usually does not need to be lengthened to allow adequate time for bicycle crossing. The AASHTO publication *Guide for the Development of Bicycle Facilities* recommends calculating clearance intervals with a bicyclist's speed of 10 mph (16 km/h) and a perception/reaction/braking time of 2.5 seconds. Figure 17-2U illustrates the approximate times for bicycles to cross intersections. At extremely wide intersections, however, consider providing a median refuge area that is at least 6 ft (2 m) wide if signal timing would prohibit adequate crossing time.

Number of Lanes*	2	3	4	5	6	7	8	9
Approximate Time to Cross Intersection	4.2 sec	5.0 sec	5.8 sec	6.6 sec	7.4 sec	8.2 sec	9.0 sec	9.9 sec

**Assumes average of 12 ft (3.6 m) lane widths*

APPROXIMATE BICYCLE TRAVEL TIMES THROUGH INTERSECTIONS

Figure 17-2U

17-2.02 Separated Bicycle Facilities

Bicycle (or shared-use) paths are facilities on exclusive rights-of-way with minimal cross flow by motor vehicles. Bicycle paths can serve a variety of purposes. They can provide a commuting bicyclist with a shortcut through a residential neighborhood, such as a connection between two cul-de-sac streets. Bicycle paths can be located along abandoned railroad rights-of-way, on former canal towpaths, river banks, and other similar areas. Bicycle paths also can provide access to areas that are otherwise only served by limited-access highways that are closed to bicycles. Appropriate locations can be identified during the planning process.

Bicycle paths should be considered extensions of the highway system. They are intended for the preferential use of bicycles in much the same way as freeways are intended for the exclusive or preferential use of motor vehicles. There are many similarities between the design criteria for bicycle paths and those for highways (e.g., horizontal alignment determination, sight distance requirements, drainage, signing and markings). However, some criteria (e.g., horizontal and vertical clearance requirements, grades, pavement structure) are dictated by the operating characteristics of bicycles that are substantially different from those of motor vehicles (see Figures 17-3A and 17-3B). During design, always be cognizant of the operating characteristics of bicycles and how they influence the design of bicycle paths. The following sections provide guidance for designing safe and functional bicycle paths.

17-2.02(a) Bicycle Path Warrants

Separated bicycle paths shall be approved by BDE, be accompanied by a transfer of maintenance and jurisdictional responsibility to local entities (see Chapter 5 for information on Local Agency Agreements and Jurisdictional Transfers), and meet one or more of the following conditions:

- A bikeway located within the adjacent roadway is considered hazardous because of factors such as motor vehicle traffic volumes and/or speeds.
- There are no alternatives for bikeways on parallel routes within 1 mile (2 km) of the project corridor.
- There is a commitment to provide bike-path continuity for an extensive length of the roadway.

The AASHTO publication *Guide for the Development of Bicycle Facilities* includes detailed information on the design and location of bicycle paths. Further guidance on bicycle paths is also available in the Rails to Trails Conservancy publication *Trails for the Twenty-First Century — Planning, Design and Management Manual for Multi-Use Trails*.

17-2.02(b) Bike Paths Versus Sidewalks

Both AASHTO and FHWA state that sidewalks generally are not designed nor recommended for bicycle travel, primarily because of their narrow width and multiple opportunities for conflicts with driveways and commercial entrances. Some suburban sidewalks, however, may be preferable to on-road accommodations, particularly if they provide adequate width, are located on both sides of the roadway (to encourage one-way travel), and are designed to minimize conflicts. In contrast, bicycling on storefront sidewalks in urban areas or in residential areas with multiple driveways should be strongly discouraged.

When assessing the appropriateness of using a sidewalk for bicycle travel, conduct a thorough survey of the area (e.g., conditions, potential conflicts), review the AASHTO publication *Guide for the Development of Bicycle Facilities,* and research any local ordinances prohibiting bicycles on sidewalks. Any decision to utilize sidewalks for bicycle accommodations shall be approved by BDE.

17-2.02(c) Shared-Use Paths

While exclusive bicycle use of a bicycle path is often ideal, it seldom occurs. For this reason, pedestrian, in-line skaters and other anticipated uses always should be considered in the design of the facility. Where practical, separate areas to minimize the conflicts arising from the different speeds of these modes. If this is not feasible, provide additional width, signing and pavement

markings, and partial paving, such as that shown in Figure 17-2V, to minimize conflicts and delineate rights-of-way.

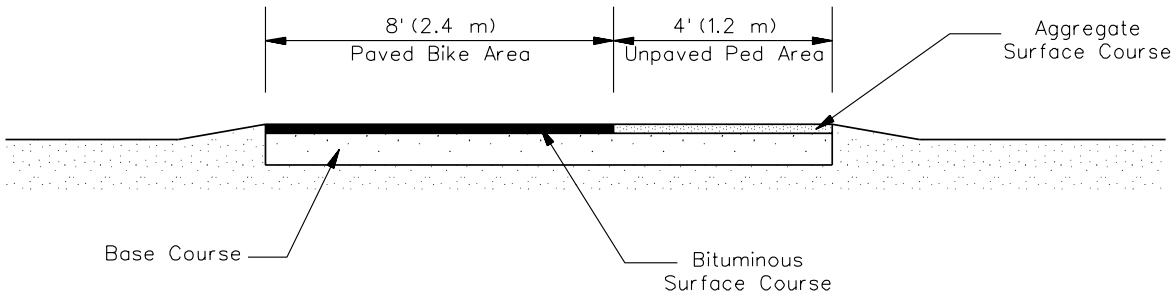

ALTERNATE BIKE PATH CROSS SECTION WITH PARTIAL PAVING

Figure 17-2V

Using a path for both bicycles and horses is not a recommended practice. However, when circumstances dictate that horses share the same corridor as bicyclists, provide a minimum shoulder width of 3 ft (1 m) and provide signs to warn users of shared use (see Figure 17-2W) and to restrict equestrians to the shoulder. Further guidance on equestrian trails is provided in the publication *Trails for the Twenty-First Century*.

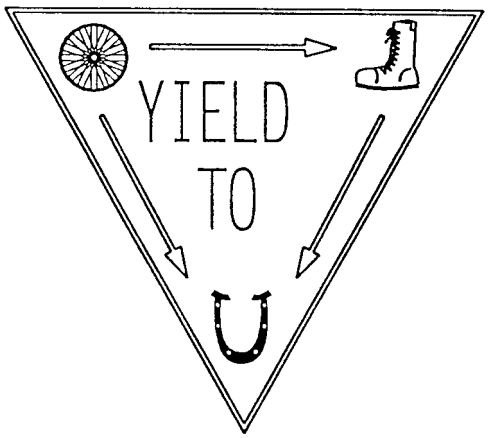

SHARED-USED PATH ETIQUETTE SIGN
Figure 17-2W

17-2.02(d) Width and Clearance

Widths for shared-use bicycle paths will vary in accordance with the conditions illustrated in Figure 17-2X. Figure 17-2Y illustrates the minimum cross sections for two-way, shared-use paths.

ANTICIPATED VOLUME	ONE-WAY(1)	TWO-WAY
< 100 Users per Peak Hour	5 ft (1.5 m)	8 ft (2.4 m)(2)
100 - 300 Users per Peak	6 ft (1.8 m)	10 ft (3.0 m)
> 300 Users per Peak Hour	7 ft (2.1 m)	12 ft (3.6 m) (3)

Notes:

1. *It should be recognized that one-way bicycle paths will often be used as two-way facilities unless effective measures are taken to assure one-way operation. Without such enforcement, it should be assumed that bicycle paths will be used as two-way facilities and designed accordingly.*

2. *Use the 8 ft (2.4 m) width only at locations where there will be low usage, few conflicts among users, good horizontal and vertical alignment providing for safe and frequent passing opportunities, minimal maintenance vehicle traffic which would cause pavement edge damage, and/or right-of-way constraints or physical barriers (requires BDE approval).*

3. *Where usage exceeds 300 users per hour during the peak periods of usage, separating bicycle and pedestrian travel may be considered. Stripe 4 ft (1.2 m) bike lanes in each direction and a 4 ft (1.2 m) width for pedestrians, as shown in Figure 17-2Y. Constructing a separated pathway for pedestrians also may be considered.*

SHARED-USE BICYCLE PATH WIDTHS

Figure 17-2X

A minimum 2 ft (600 mm) wide graded turf or gravel area should be maintained adjacent to both sides of the pavement; however, 3 ft (900 mm) or more is desirable to provide clearance from trees, poles, walls, fences, guardrails, and other lateral obstructions. A wider graded area on either side of the bicycle path also can serve occasional equestrian use or as a separate jogging path. See Section 17-2.02(c).

Where a two-way bike path is physically located within the highway right-of-way, it shall be separated horizontally from motorized traffic so as not to interfere with the operational aspects of the roadway. This separation should be as wide as practical, but not less than 5 ft (1.5 m), and still allow the bicyclist to be visible by the motorist. For example, in an urban section, a two-way

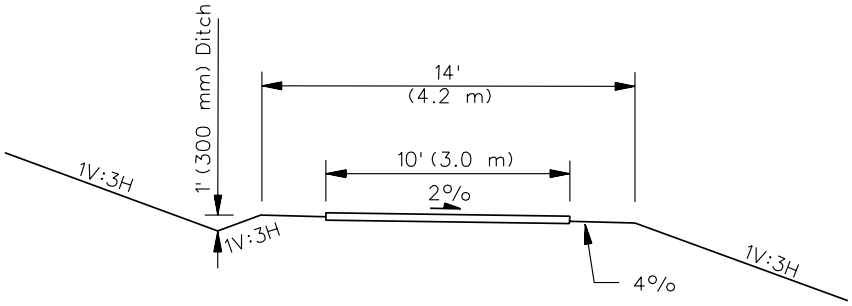

TYPICAL BIKE PATH FOR MINIMAL SHARED USE

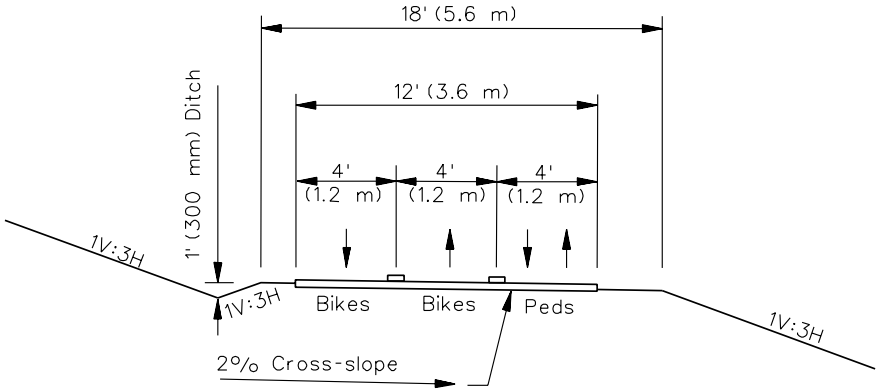

TYPICAL BIKE PATH FOR SUBSTANTIAL SHARED USE
(Optional Striping Shown)

CROSS SECTIONS FOR TWO-WAY, SHARED-USE BICYCLE PATHS
Figure 17-2Y

bike path would be placed much like a typical sidewalk, provided the edge of the path is more than 5 ft (1.5 m) from the curb face (see Figure 17-2Z). In a rural section, it is desirable for a two-way bike path to be located on the top of the back slope. At a minimum, the path should be no less than 10 ft (3 m) from the edge of the traffic lane in a rural section. In all cases, where a bike path is expected to cross a street near an intersection, the bike path should cross the side street either in a typical crosswalk fashion as in Figure 17-2AI or mid-block (see the AASHTO *Guide for the Development of Bicycle Facilities*).

Protect two-way bikeways located less than 5 ft (1.5 m) from the traveled way (generally, the face of the curb) with a 3.5 ft (1.1 m) high barrier. Such barriers serve both to prevent bicyclists from making undesirable movements between the path and the highway shoulder and to reinforce the concept that the bicycle path is an independent facility. For additional information on barriers and railings, see Section 17-2.01(e).

The consideration of safety rails along side slopes should be based on a subjective analysis of trail-side elements and conditions. Generally, if the consequences of striking a fixed object hazard or running off the path are believed to be more serious than hitting the railing, then the barrier may be warranted. In addition, the cost effectiveness and probability of encroachment also should be considered. For example, along a lengthy tangent section of bicycle path on an elevated railroad section, the cost effectiveness of installing safety rail along the entire distance would be questionable; however, the placement of rail at clearly hazardous locations (e.g., river crossing approaches, less than minimum widths and curves, potential points of conflict) would be prudent. Select the treatment that is judged to be the most practical and cost-effective for the site. The range of treatments includes:

- eliminating the hazard (e.g., flatten embankment, remove rock outcroppings);
- relocating the hazard;
- shielding the hazard with safety railing; or
- doing nothing.

The determination of the separation distance between a bike path and an active railroad is dependent on the speed and frequency of the rail service, the amount of access available to the railroad from the surrounding area, and the requirements of the railroad company. For low speed and low frequency service, the separation may be as little as 10 ft – 15 ft (3 m – 5 m), with no physical barrier (e.g., fencing, landscaping). As railroad speeds and frequencies increase, the requirements for increased separation and a physical barrier increase as well. A 8 ft (2.4 m) high chain link fence or other barrier type may be required to satisfy the railroad company that bicyclists will be adequately separately from the hazards of the trains.

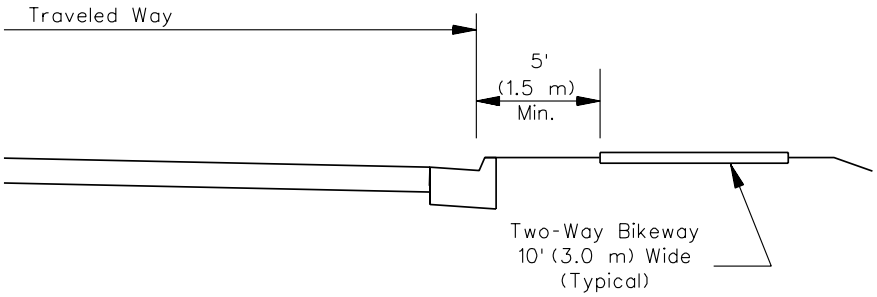

(a)

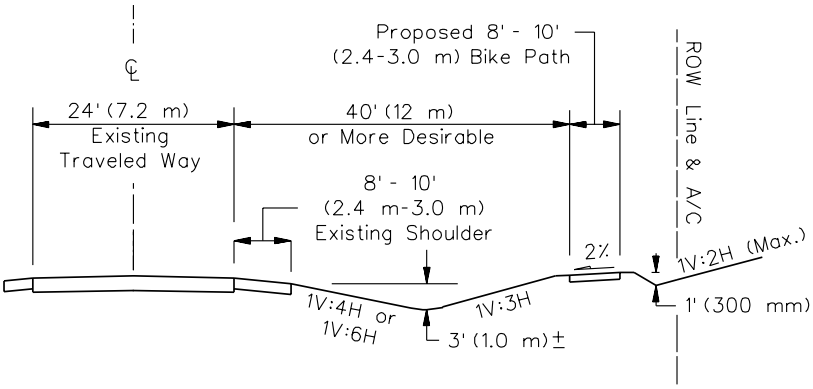

(b)

CROSS SECTION OF PATH SEPARATED FROM ADJACENT ROADWAY

Figure 17-2Z

The vertical clearance to obstructions should be a minimum of 8 ft (2.4 m). However, vertical clearance may need to be greater to permit passage of maintenance vehicles, rescue vehicles, and ambulances. Rescue vehicles typically can exceed 9 ft (2.7 m) in height and 9 ft (2.7 m) in width. In undercrossings and tunnels, a vertical clearance of 10 ft (3 m) is desirable. The geographical location of the vertical obstruction, as well as alternate access points, are primary considerations for determining clearance. It is imperative that adequate clearance be provided where the bikeway offers the primary access to a remote location. Any overhead restrictions with less than a 10 ft (3 m) clearance should be marked on the structure according to the *ILMUTCD.*

17-2.02(e) Design Speed

Bicycle paths should be designed for a selected speed that is at least as high as the preferred speed of the faster bicyclists. In general, use a minimum design speed of 20 mph (30 km/h). However, where the grade exceeds 4% or where strong prevailing tail winds exist, (e.g., along a lake or river), a design speed of 30 mph (50 km/h) is advisable.

On unpaved paths, where bicyclists tend to ride slower, use a lower design speed of 15 mph (25 km/h). Similarly, where the grades or the prevailing winds dictate, a higher design speed of 25 mph (40 km/h) should be considered.

17-2.02(f) Horizontal Alignment and Superelevation

Unlike an automobile, a bicycle must be leaned while cornering to prevent it from falling outward due to centrifugal force. The balance of centrifugal force due to cornering, and the bicycle's downward force due to its mass, act through the bicycle/operator's combined center of mass which must intersect a line that connects the front and rear tire contact points.

The horizontal curvature should not require a bicyclist to use a lean angle greater than 15°. At these curves, the minimum radius is calculated by the following equation:

$$R_{min} = 0.067\ V^2/\tan\theta \qquad \text{(U S Customary) (Equation 17-2.1)}$$

$$R_{min} = 0.0079\ V^2/\tan\theta \qquad \text{(Metric) (Equation 17-2.1)}$$

Where: R_{min} = minimum radius of curvature, ft (m)
V = design speed, mph (km/h)
θ = lean angle from vertical, degrees

Figure 17-2AA presents minimum radii for horizontal curves where lean angles up to 15° are appropriate and the bike path is paved.

DESIGN SPEED (V)		LEAN ANGLE (θ) (degrees)	MINIMUM RADIUS (R_{min})	
mph	km/h		ft	m
15	20	15	55	12
20	30	15	100	27
25	40	15	155	47
30	50	15	225	74

DESIRABLE MINIMUM RADIUS FOR PAVED PATHS BASED ON 15° LEAN ANGLE

Figure 17-2AA

Where a lean up to 20° can be tolerated, the minimum radius is calculated by the following equation:

$$R_{min} = \frac{V^2}{15\left(\frac{e}{100} + f\right)}$$ (US Customary) (Equation 17-2.2)

$$R_{min} = \frac{V^2}{127\left(\frac{e}{100} + f\right)}$$ (Metric) (Equation 17-2.2)

Where:
R_{min} = minimum radius of curvature, ft (m)
V = design speed, mph (km/h)
e = superelevation rate, percent
f = side-friction factor

Figure 17-2AB presents minimum radii for horizontal curves where lean angles up to 20° can be tolerated and the bike path is paved. The radii assume a maximum superelevation rate of 2%. Where transitioning from a 2% cross slope on tangent to a 2% superelevation rate on the high side of the curve, use a minimum transition length of 15 ft (5 m).

DESIGN SPEED (V)		SIDE-FRICTION FACTOR (f) (Paved Surface)	MINIMUM RADIUS (R_{min})	
mph	km/h		ft	m
15	20	0.31	45	10
20	30	0.28	90	24
25	40	0.25	155	47
30	50	0.21	260	86

MINIMUM RADII FOR PAVED PATHS BASED ON 2% SUPERELEVATION RATE AND 20° LEAN ANGLE

Figure 17-2AB

Figure 17-2AC presents minimum radii for horizontal curves where lean angles up to 20° can be tolerated and the bike path is unpaved.

DESIGN SPEED (V)		SIDE-FRICTION FACTOR (f) (Unpaved Surface)	MINIMUM RADIUS (R_{min})	
mph	km/h		ft	m
15	20	0.16	85	18
20	30	0.14	165	45
25	40	0.12	300	90
30	50	0.11	460	152

MINIMUM RADII FOR UNPAVED PATHS BASED ON 2% SUPERELEVATION RATE AND 20° LEAN ANGLE

Figure 17-2AC

When a lean angle of 20° is used, the bicyclist taking the curve will occupy more horizontal space and more width needs to be provided. In these cases, the pathway width should be increased as in Figure 17-2AD and a centerline located in the middle of the curve.

When curve radii smaller than those shown in Figure 17-2AB must be used because of limited right-of-way, topographical features, or other considerations, standard curve warning signs and supplemental pavement markings should be installed according to the *ILMUTCD*. The negative effects of sharper curves can also be partially offset by widening the pavement through the curves as shown in Figure 17-2AD.

17-2.02(g) Drainage

Bicycle path pavements should have a cross slope of 2% for drainage. Sloping in one direction instead of crowning is preferred and usually simplifies the drainage and surface construction. A smooth surface is essential to prevent water ponding and ice formation. Shoulders should provide further positive drainage by sloping at 2% to 4%.

Where a bicycle path is constructed on the side of a hill, a ditch of suitable dimensions should be provided on the uphill side to intercept the hillside drainage. Design these ditches so as not to present an obstacle to bicyclists. Figure 17-2AE shows the dimensions of a suitable ditch. Where necessary, provide catch basins with drains to carry intercepted water under the path. Locate drainage grates and manhole covers outside the traveled way of bicyclists. To assist in draining the area adjacent to the bicycle path, consider preserving the natural ground cover. Include seeding, mulching, and sodding of adjacent slopes, swales, and other erodible areas in the design plans.

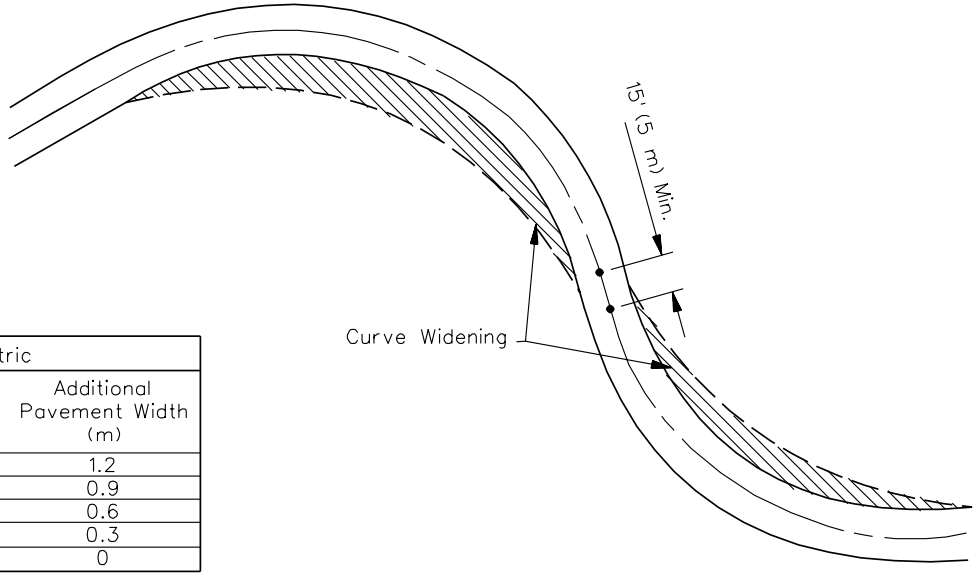

US Customary		Metric	
Curve Radius (ft)	Additional Pavement Width (ft)	Curve Radius (m)	Additional Pavement Width (m)
0-25	4	0-7.5	1.2
25-50	3	7.5-15	0.9
50-75	2	15-22.5	0.6
75-100	1	22.5-30	0.3
100+	0	30+	0

Note: Only use additional pavement width where curve radii are less than design speed of bike path or where a 20° lean angle is assumed.

BIKEWAY CURVE WIDENING FOR VARIOUS CURVE RADII

Figure 17-2AD

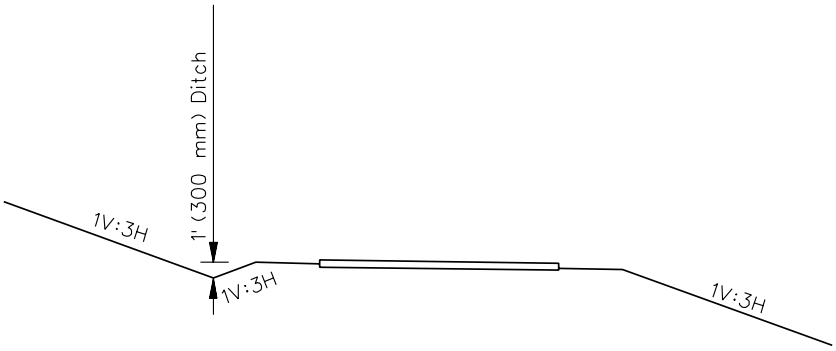

BIKE PATH DRAINAGE
Figure 17-2AE

17-2.02(h) Grade

Long excessive grades on bicycle paths should be kept to a minimum. Avoid using grades greater than 5% because they are difficult for many bicyclists to ascend and the descents cause some bicyclists to exceed the speeds at which they are competent. Where terrain dictates, designers may need to exceed the 5% grade for short sections in accordance with Figure 17-2AF.

Shared Use Path Grade	Length
5-6%	For up to 800 ft (240 m)
7%	For up to 400 ft (120 m)
8%	For up to 300 ft (90 m)
9%	For up to 200 ft (60 m)
10%	For up to 100 ft (30 m)
11+%	For up to 50 ft (15 m)

GRADE RESTRICTIONS FOR SHARED USE PATHS

Figure 17-2AF

Grades steeper than 3% are not practical for bicycle paths with crushed aggregate surfaces. Where terrain dictates and where the proposed bike path is to be constructed with crushed stone, provide a stabilized surface on the portions of the path with the steeper grades. This design feature also has advantages of alleviating erosion on steep slopes and enhances safety by improving skid resistance.

Options to mitigate problems caused by excessive grades are as follows:

- When using a long grade, provide an additional 4 ft to 6 ft (1.2 m to 1.8 m) of width to permit slower speed bicyclists to dismount and walk their bikes up the grade.
- Provide signing to alert bicyclists of the maximum percent of grade.
- Provide recommended descent speed signing.
- Exceed minimum stopping sight distances and provide longer radius curves.

17-2.02(i) Accessibility

The vast majority of independent bicycle paths in Illinois are located on abandoned railroads, which were originally located and constructed where changes in elevation and, thus, grades could be minimized. Many miles (kilometers) of paths have been fashioned from canal towpaths. These grades are ideal for meeting the needs of all users, including disabled users. Logically located access points to these paths also should ensure a disabled person's ability to access and use these facilities. There will exist paths, however, that will be impractical or environmentally inappropriate to provide access for the disabled. The conditions that would prevent full accessibility include those that:

- Cause harm to significant natural, cultural, historic or religious characteristics of a site;
- Alter the fundamental experience of the setting or intended purpose of the trail;
- Require construction methods that are prohibited by federal, state or local regulations; and
- Involve terrain characteristics (e.g., slope, soils, geologic or aquatic) that prevent compliance with the technical provisions (being developed by the Regulatory Negotiation Committee on Outdoor Developed Areas).

The ADA Access Board's publication *Recommendations for Accessibility Guidelines: Recreational Facilities and Outdoor Developed Areas* suggests that paths be assessed according to their "challenge level." Locate major path heads and access points and their associated facilities near areas that are available to all users, so that the facility may be enjoyed by as many users as possible. Thus, path heads and access points should be accessible to all users. However, because areas of the path may not be accessible to all users, the challenge level of each facility should be posted for the utility of all disabled users.

Outdoor linear bikeways/paths are classified based on the level of development of the surrounding area. A "Highly" developed area would be represented by a bikeway/path running through an urbanized area, such as a downtown area or a college campus. A "Moderately" developed area

might be a path located along a river or canal in a semi-urbanized area. A "Minimally" developed area would be represented by a remote hiking path largely carved out of the existing landscape.

The accessibility challenge level varies with the function of the particular segment of the facility. Access routes, for example, from the parking lot to the path itself, require a higher level of development than the path. Accessibility for each of these types of facilities becomes more difficult as they become more remote. Accordingly, a "Highly" developed area should present an easier level of accessibility. A "Moderately" developed area presents a more moderate level of accessibility, and a "Minimally" developed area presents a more difficult accessibility level. Figure 17-2AG presents design criteria for both access routes and paths.

TYPE OF FACILITY	LEVEL OF DEVELOPMENT					
	Highly		Moderately		Minimally	
	A[1]	B[1]	A	B	A	B
Sustained Running Grade (max)	5%	5%	5%	8%	8%	12%
Maximum Grade Allowed[2]	8%	10%	10%	14%	10%	20%
For a Maximum Distance	30 ft (9 m)	30 ft (9 m)	50 ft (15 m)	50 ft (15 m)	50 ft (15 m)	50 ft (15 m)
Cross Slope (max)	3%	3%	3%	5%	3%	8%

1. *Column A is the accessibility design criteria for access routes to bicycle paths. Column B is the design criteria for bicycle paths.*

2. *Maximum grade should not exceed the sustained running grade for more than 20% of length.*

SUMMARY OF ACCESSIBILITY DESIGN CRITERIA FOR BICYCLE PATHS/TRAILS
Figure 17-2AG

17-2.02(j) Sight Distance

To provide bicyclists with an opportunity to see and react to the unexpected, a bicycle path should be designed with adequate stopping sight distance and intersection sight distance. The distance required to bring a bicycle to a full controlled stop is a function of:

- the bicyclist's perception and brake reaction time,
- the initial speed of the bicycle,
- the coefficient of friction between the tires and the pavement, and
- the braking ability of the bicycle.

See the AASHTO publication *Guide for the Development of Bicycle Facilities* for information on determining adequate sight distance.

Bicyclists frequently ride abreast of each other on bicycle paths and, on narrow bicycle paths, bicyclists have a tendency to ride near the middle of the path. For these reasons, and because of the serious consequences of a head-on bicycle crash, calculate lateral clearances on horizontal curves based on the sum of the stopping sight distances for bicyclists traveling in opposite directions around the curve. Where this is not feasible, consider widening the path through the curve, installing a yellow center stripe, installing turn or curve signs (W1-1 or W1-2) as appropriate, or "REDUCE SPEED" sign, or some combination of these alternatives.

17-2.02(k) Bike Path Intersections

Very few bikeways start and end at a trail head without crossing various transportation elements in between. These intersections can be roadways, railroads, or other bike paths. These points of intersection present potential conflicts and must be thoroughly analyzed to consider their impacts on the trail user as well as the user of the other intersecting legs. Figure 17-2AH illustrates how a bikeway could interact with a variety of intersections.

Roadway Intersections

Intersections with roadways are important considerations in bicycle path design. It is important to understand that the majority of bicycle travel on pathways is not from endpoint to endpoint and that cyclists will use the roadway system as access and egress to the path. It is therefore imperative to ensure safe and reasonable points of access to and from roadways along the length of the bike path.

According to AASHTO, it is preferable that the crossing of a bicycle path and a highway be at a location significantly away from the influence of intersections with other highways. Controlling vehicular movements at such remote intersections is more easily and safely accomplished through the application of standard traffic control devices and normal rules of the road.

Where physical constraints prohibit such independent intersections, the crossing may be at or adjacent to a pedestrian crossing, as shown in Figure 17-2AI. These joint crossings should meet the requirements of Figure 17-2X where possible to accommodate dual use. However, any use of rerouting that causes redundant travel may be perceived as a barrier and should not be used. Use engineering judgment to decide when such safety measures are necessary and cost effective by considering traffic volumes, motor vehicle speeds, and anticipated usage. Assign right-of-way and provide adequate sight distance to minimize the potential for conflicts resulting from unconventional turning movements.

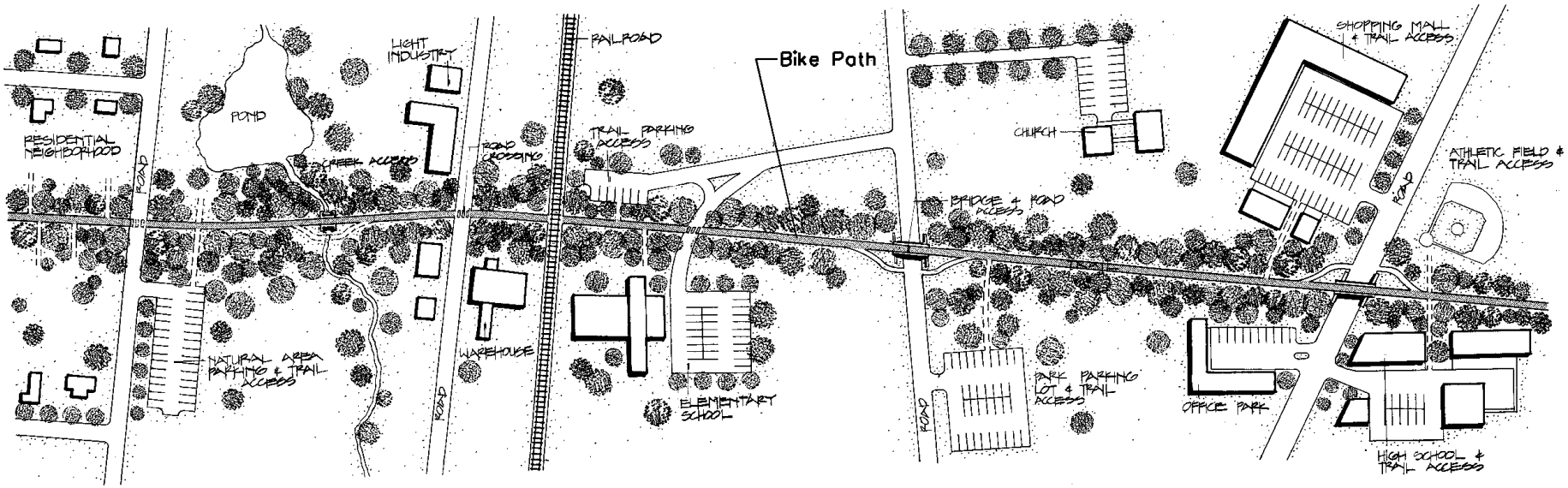

BIKE PATH /TRAIL INTERACTION WITH VARIOUS INTERSECTIONS

Figure 17-2AH

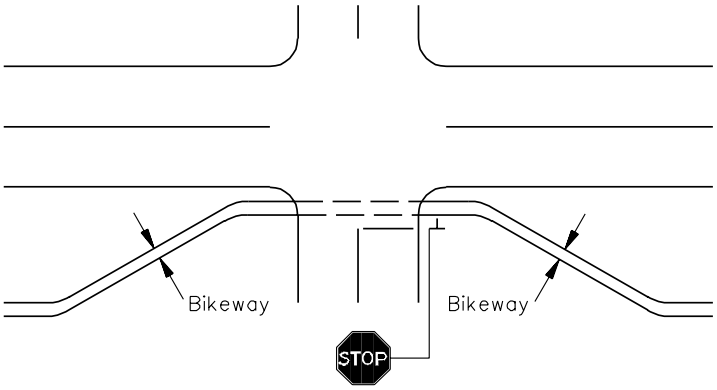

SHARED BICYCLE/PEDESTRIAN CROSSING

Figure 17-2AI

Where bike paths cross roadways, assess the safety potential of the crossings. Evaluate the crossing according to the minimum pedestrian volume and school crossing control criteria provided in the *ILMUTCD* and the ITE publication *School Trip Safety Program Guidelines*. This guidance indicates that adequate gaps need to occur on an average of at least one per minute during times of predominate usage. If adequate gaps are not available, some form of crossing control is warranted. Control can include flashing lights, signals, or a grade separation. At crossings with high-volume, multi-lane arterial highways where a signal or a grade separation is not warranted, consider providing a median refuge area for bicyclists.

Where bicycle paths terminate at existing roads, it is important to integrate the path into the existing system of roadways. Properly design the terminals to transition the traffic into a safe merging or diverging situation. Provide appropriate signing to warn and direct both bicyclists and motorists regarding these transition areas. Ensure that bicycle path signs are located so that they do not confuse motorists and that roadway signs are placed so as not to confuse bicyclists.

Bicycle path intersection approaches should have relatively flat grades. Check stopping sight distances at intersections and provide adequate warning to allow bicyclists to safely stop before the intersection, especially on downgrades.

Flare the ramps for curb cuts at intersections to allow bicycle movements from the roadway to the path. A minimum flare of 5 ft (1.5 m), as shown in Figure 17-2AJ, will allow bicycles, especially tandem bicycles (i.e., two-person bicycles) and bicycles with trailers, a better opportunity to negotiate the turn without running off the pathway. If maintenance vehicles are expected to access the trail at these points, provide a 15 ft (4.5 m) flare to reduce edge rutting and turf disturbance.

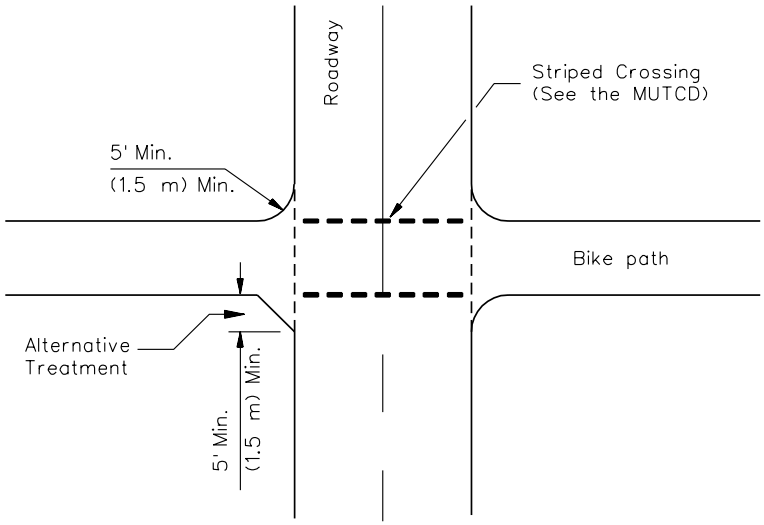

CURB FLARES AT BICYCLE/ROAD INTERSECTIONS

Figure 17-2AJ

Railroad Crossings

Where independent bike paths intersect with railroads, locate the crossing as close to a right angle as practical for safety reasons, as shown in Figure 17-2AK. See Item 2 in Section 17-2.01(g) for specific design guidance. Signing and pavement markings shall be in accordance with the *ILMUTCD*. Crossbuck signs and pavement markings are minimum advanced warning requirements. In addition, ensure that adequate sight distance is provided so bicyclists can see approaching trains. Existing and planned railroad operations always should be factored into the design elements of the crossing. As train speeds and frequencies increase, the level of crossing protection should increase. It may be necessary to provide train activated crossing gates and signals, along with fencing, to ensure the safety of bicyclists and to satisfy the requirements of the railroad company. In extreme situations, rerouting the bike path to an adjacent roadway crossing or installing an underpass or overpass may provide the only crossing solution.

Bike Path Crossings

Where paths intersect with other paths, the minimum radius provided should be 15 ft (4.5 m), as shown in Figure 17-2AL, to accommodate tandem bicycles, bicycles with trailers, and occasional vehicular movements without running off the pathway. These movements are likely to be negotiated at higher speeds and thus larger radii are necessary.

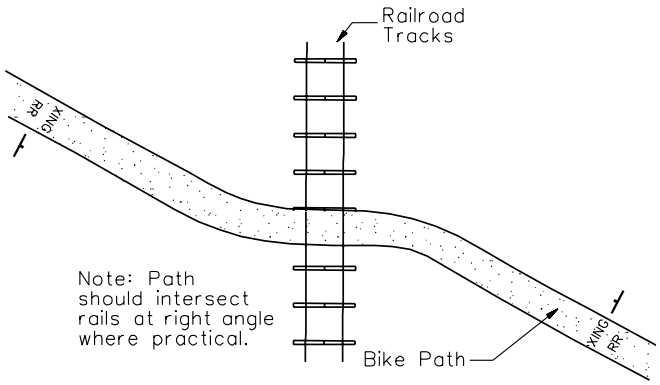

BIKE PATH/RAILROAD INTERSECTIONS

Figure 17-2AK

17-2.02(l) Structures

An overpass, underpass, small bridge, or drainage facility may be necessary to provide continuity to a bicycle path. For continuity purposes, it also may be necessary to continue a bike path across a highway structure. Section 17-2.01(e) provides design criteria for bikeway facilities on highway structures (e.g., widths, barriers, railings).

With new bicycle path structures, the minimum clear width should be the same as the path's paved approach, and the desirable clear width should be 2 ft (600 mm) minimum on each side. See Figure 17-2AM. Carrying the clear width across a bicycle path structure has two advantages. First, it provides a minimum horizontal shy distance from the railing or barrier; and second, it provides needed maneuvering space to avoid conflicts with pedestrians and other bicyclists who are stopped on the bridge. For example, additional width may be warranted on structures over rivers where users would likely stop to enjoy the view. Users would be less likely to stop on bridges over railroads or highways or in tunnels. See Section 17-2.02(d) for additional guidance on bikeway widths and horizontal and vertical clearances.

Bridges designed exclusively for bicycle traffic should be designed for pedestrian live loadings in accordance with the AASHTO publication *Guide Specifications for Design of Pedestrian Bridges*. In general, multipurpose bridges should be designed to support their anticipated traffic. Bridges that must provide access for ambulances or rescue vehicles shall support a minimum design load of 6.25 tons (55.6 kN).

On all bridge decks, ensure that bicycle-safe expansion joints are used. Where wood planking is used for flooring, it should be placed 45 to 90 degrees from the direction of travel as shown in Figure 17-2AM.

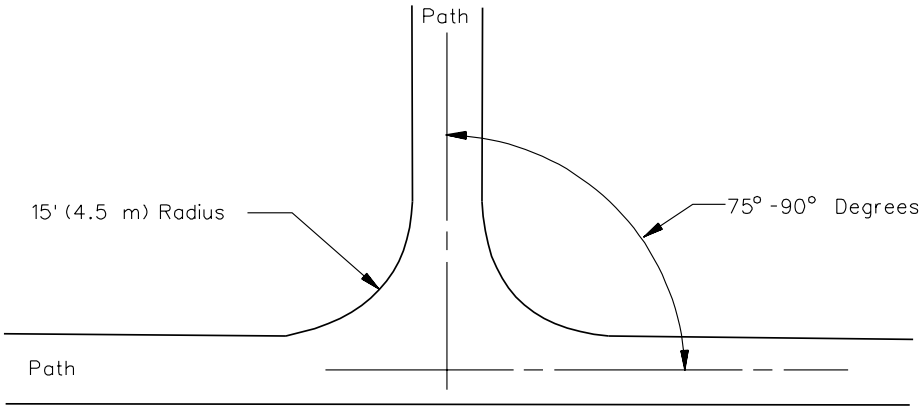

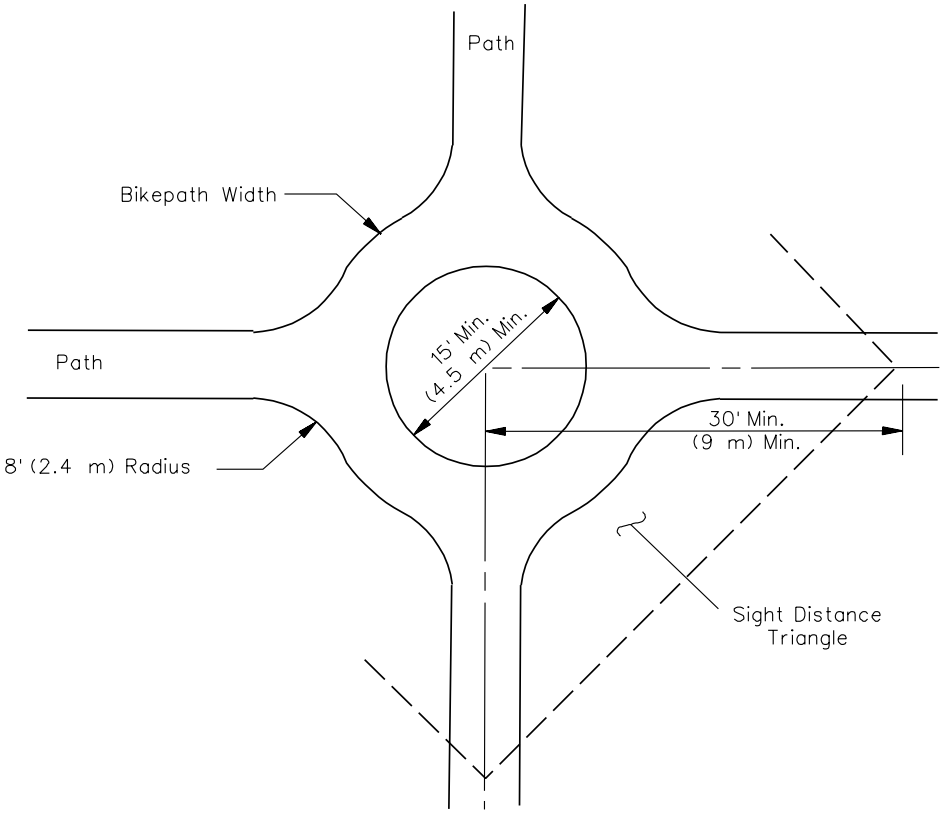

Note: Consider "KEEP RIGHT" signs.

BIKE PATH INTERSECTIONS

Figure 17-2AL

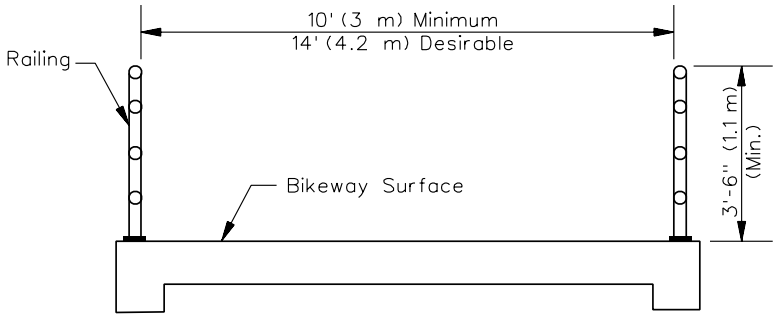

BRIDGE CROSS SECTION

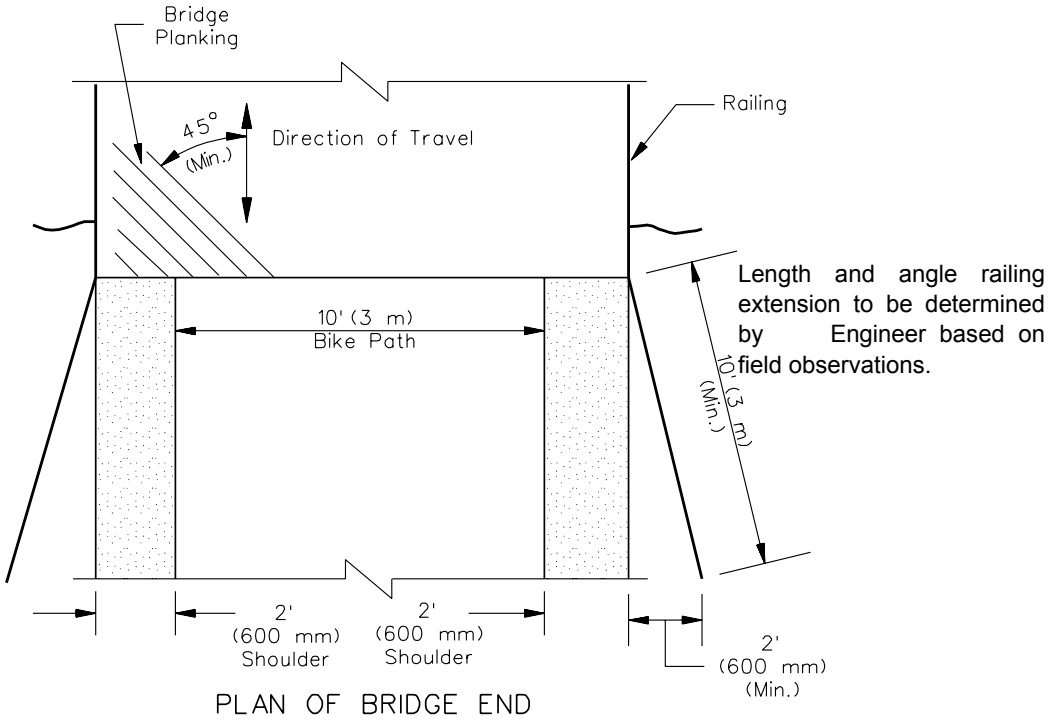

PLAN OF BRIDGE END

PLAN AND CROSS SECTION OF BIKE PATH BRIDGE WITH RAILING EXTENSION

Figure 17-2AM

Bridge railings on paths should be a minimum of 3.5 ft (1.1 m) tall. Bridge approaches should provide a safety railing as shown in Figure 17-2AM to protect users from hazardous conditions.

Certainly, other types of bikeway structures will be necessitated by the various ways that bikeways can interface with roadways, rivers, or railroads. Bikeways can utilize the underside of a highway or railroad bridge. Bikeways can cross under roadways or railroads in various ways, as illustrated in Figures 17-2N, 17-2AN, and 17-2AO.

Design of bikeway tunnels should follow the same guidance for size and overhead clearance, as discussed in Section 17-2.02(d), with recognition of the types of traffic that need to be accommodated (e.g., emergency vehicles). With tunnels or box culverts exceeding 100 ft (30 m) in length, the users' sense of security is enhanced with larger openings (minimum 10 ft (3 m) high and 14 ft (4.2 m) wide). The alignment of the approaching path should provide a clear view through the structure where practical. On long structures, such as under multi-lane highways, a shaft opening at the median can provide natural light and ventilation. Lighting should be considered in areas where security is a concern (see Section 17-2.02(n)). Where bikeways are routed under highway bridges, drainage from the bridge above should be routed to drain away from the path surface.

In limited, restricted cases, bicycle access sometimes can be provided under roadways or railroads through pedestrian underpasses. While not ideal because a bicyclist may need to dismount and act as a pedestrian, these underpasses sometimes offer a safer alternative than an at-grade crossing. Where bicyclists are required to walk their bicycles up stairs, provide ramps at the outer edge to facilitate ease of access and egress as shown in Figure 17-2AP.

In areas where water flow is intermittent and minimal, paved fords may be a reasonable option to a bridge.

17-2.02(m) Signing and Marking

Adequate signing and marking are essential on bicycle paths, especially to alert bicyclists to potential conflicts and to convey regulatory messages to both bicyclists and motorists at highway intersections. Provide warning signs for design elements that are less than minimum criteria (e.g., less than minimum curve radii, vertical or horizontal clearances, speeds dictated by grades) to warn the user of these conditions. In addition, use guide signing, (e.g., directions, destinations, distances, route numbers, names of crossing streets) in the same manner as they are used on highways. In general, uniform application of traffic control devices, as described in the *ILMUTCD*, will tend to encourage proper bicyclist, as well as motorist, behavior.

BOX CULVERTR INTENDED FOR FUTURE BIKEWAY
Figure 17-2AN

BIKE PATH DEPRESSED TO GAIN ADEQUATE VERTICAL CLEARANCE
Figure 17-2AO

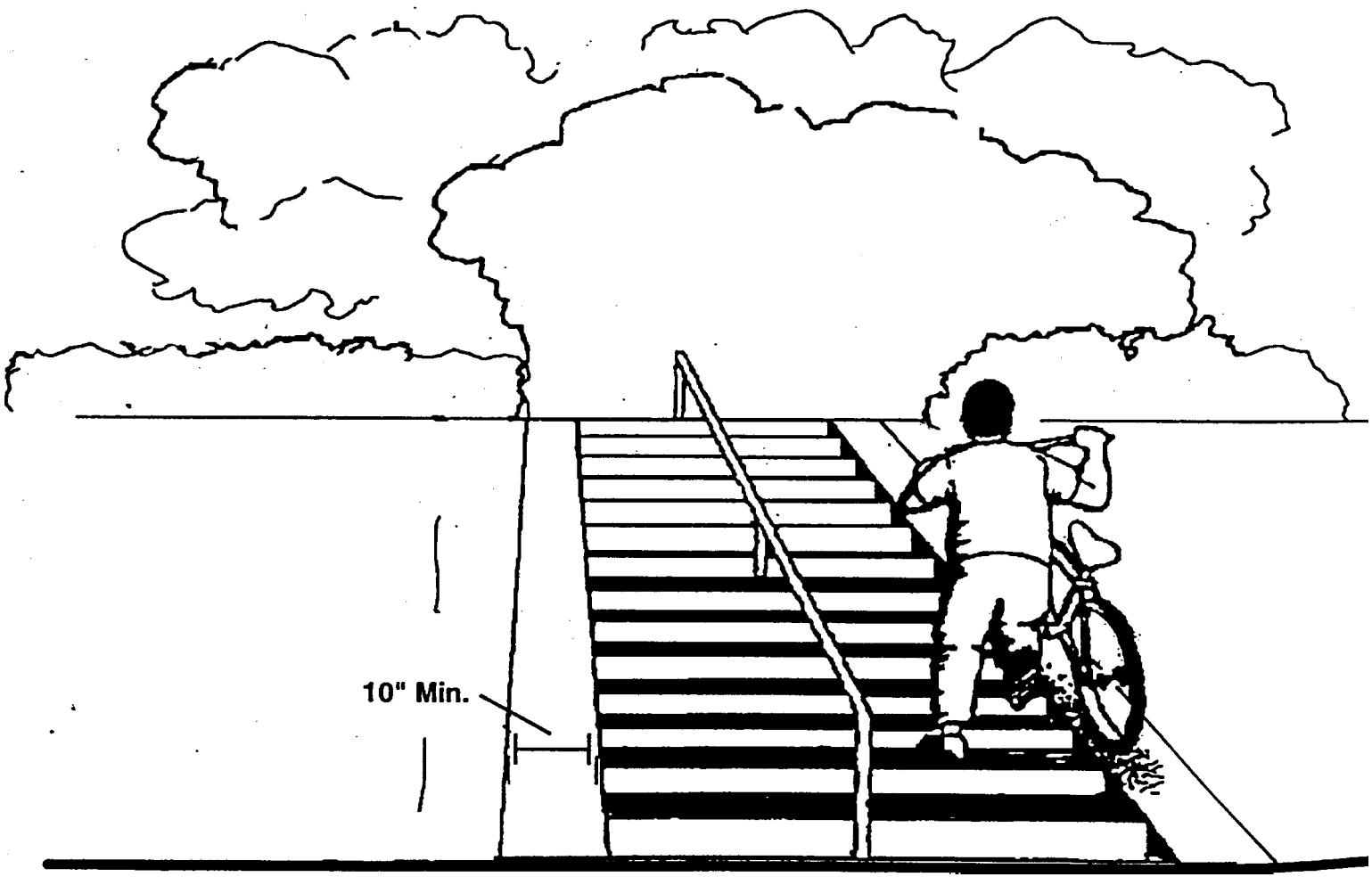

BIKE RAMP AT STAIR ACCESS
Figure 17-2AP

Consider a broken yellow centerline stripe (3 ft (1 m) stripe with 10 ft (3 m) gap) to separate opposite directions of travel. This is particularly beneficial in the following circumstances:

- for heavy volumes of bicycles,
- on curves with restricted sight distance, and
- on unlighted paths where nighttime riding is expected.

White edge lines also can be very beneficial where nighttime bicycle traffic is expected. Marking should be considered for shared-use paths that are 13 ft (4 m) or wider to delineate lanes for bicyclists and pedestrians, as shown in Figure 17-2Y.

Care should be exercised in the choice of pavement marking materials. Some marking materials are slippery when wet and should be avoided in favor of more skid resistant materials.

17-2.02(n) Lighting

Fixed-source lighting reduces conflicts along paths and at intersections. In addition, lighting allows the bicyclist to see the bicycle path direction, surface conditions, and obstacles. Lighting for bicycle paths is important and should be considered where riding at night is expected (e.g., bicycle paths serving college students or commuters, highway intersections). Lighting also should be considered through underpasses or tunnels and when nighttime security could be a problem (see Chapter 56). Depending on the location, average maintained horizontal illumination levels of 5 lx to 22 lx should be considered. Where special security problems exist, higher illumination levels may be considered. Light standards (poles) should meet the recommended horizontal and vertical clearances. Luminaires and standards should be at a scale appropriate for a pedestrian or bicycle path. Where security is a problem, lighting fixtures should be vandal proof.

17-2.02(o) Restriction of Motor Vehicle Traffic

Bicycle paths often need some form of physical barrier at roadway intersections to prevent unauthorized motor vehicles from using the facilities. Provisions can be made for a lockable, removable post ("bollard") or drop gate to permit entrance by authorized vehicles. The posts should be set far enough back from the edge of the vehicular roadway so as not to constitute a hazard. They shall meet Federal breakaway sign post criteria where susceptible to being struck by vehicles. Where necessary, the post should be permanently reflectorized for nighttime visibility and painted a bright color for improved daytime visibility. When more than one post is used, a 5 ft (1.5 m) spacing is recommended, as indicated in Figure 17-2AQ. Do not use gates that prohibit entry by persons in wheelchairs, cause bicyclists to enter the path around the outside of the gate post, or restrict the movement of any intended users.

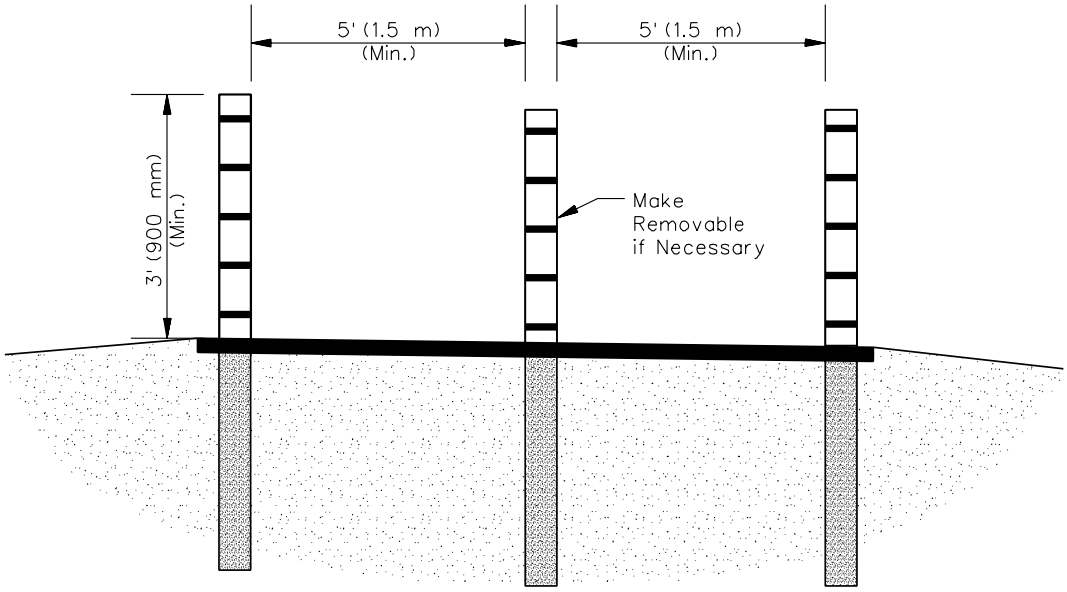

Note: Reflectorize where necessary.

BARRIER POST

Figure 17-2AQ

An alternative method of restricting entry of motor vehicles is to split the entry way into two 5 ft (1.5 m) sections separated by low landscaping as shown in Figure 17-2AR. Emergency vehicles can enter, if necessary, by straddling the landscaping. The higher maintenance costs associated with landscaping should be acknowledged, however, before this alternative method is selected.

17-2.02(p) Pavement Structure

Designing and selecting pavement sections for bicycle paths are in many ways similar to designing and selecting highway pavement sections. A soils investigation should be conducted to determine the load carrying capabilities of the native soil and the need for any special provisions. The investigation need not be elaborate, but should be performed by, or under the supervision of, a qualified engineer. In addition, while loads on bicycle paths will be substantially less than highway loads, design bicycle paths to sustain, without damage, the wheel loads of occasional emergency, patrol, maintenance, and other motor vehicles that are expected to use or cross the path.

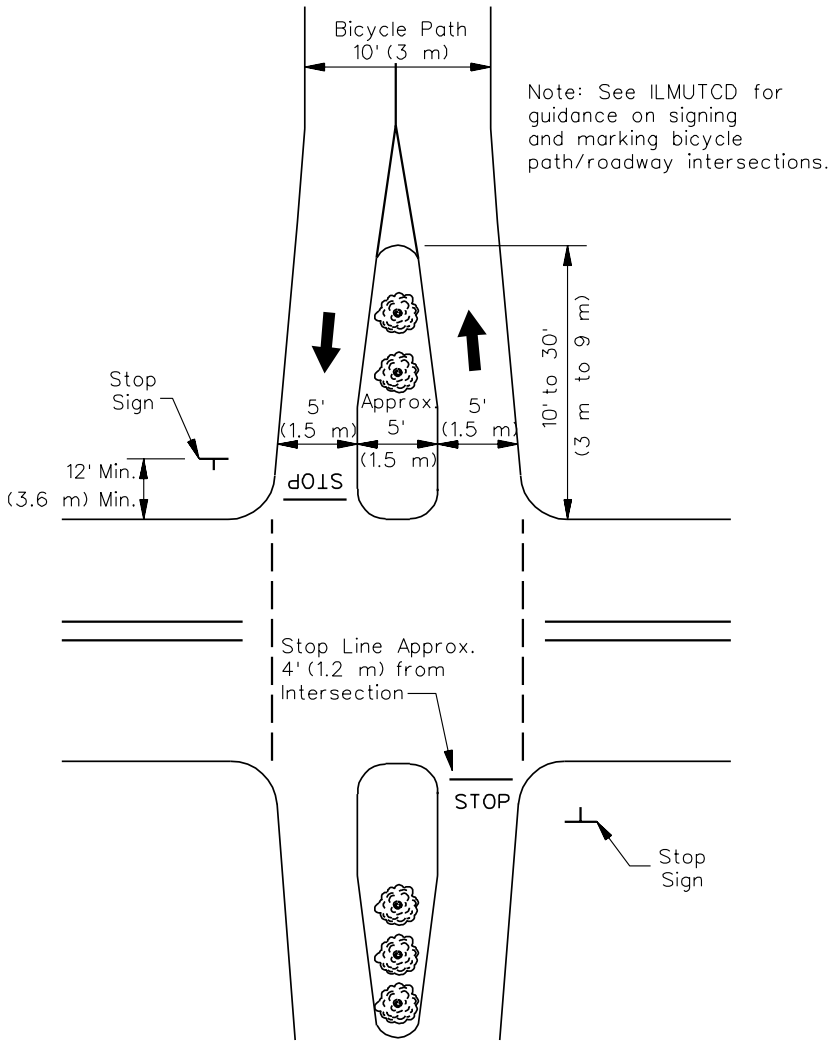

LANDSCAPING DIVIDER

Figure 17-2AR

Give particular consideration to the location of motor vehicle wheel loads on the path. Where motor vehicles are driven on bicycle paths, especially 8 ft (2.4 m) widths, their wheels usually will be at or very near the edges of the path. Because this can cause edge damage that will, in turn, reduce the effective operating width of the path, adequate edge support should be provided. Edge support can be either in the form of stabilized shoulders (e.g., use of geotextile fabric underlay) or in constructing additional pavement width.

Shared-use paths built along streams and in wooded areas present special problems. The roots of shrubs and trees can pierce through the path surfacing and cause it to bubble up and break apart in a short period of time. Preventative methods include: removal of vegetation, realignment of the path away from trees, and placement of root barriers (e.g., a 1 ft (300 mm) deep plastic shield) along the edge of the path as shown in Figure 17-2AS.

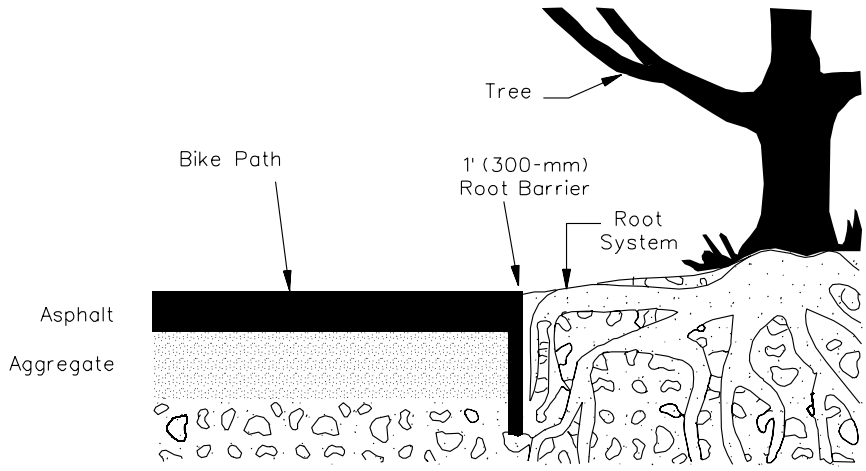

SHARED-USE PATH ADJACENT TO TREES

Figure 17-2AS

At unpaved highway or driveway crossings of bicycle paths, pave the highway or driveway a minimum of 10 ft (3 m) on each side of the crossing to reduce the amount of gravel being scattering along the path by motor vehicles. Design the pavement structure at the crossing to adequately sustain the expected loading at that location.

Bituminous pavement surfaces are preferred over those of crushed aggregate because aggregate materials provide a much lower level of service and require substantially increased maintenance over the life of the project. Concrete may offer advantages in wet soil conditions or in areas that may periodically flood. As guidance, Figure 17-2AT provides examples of several acceptable

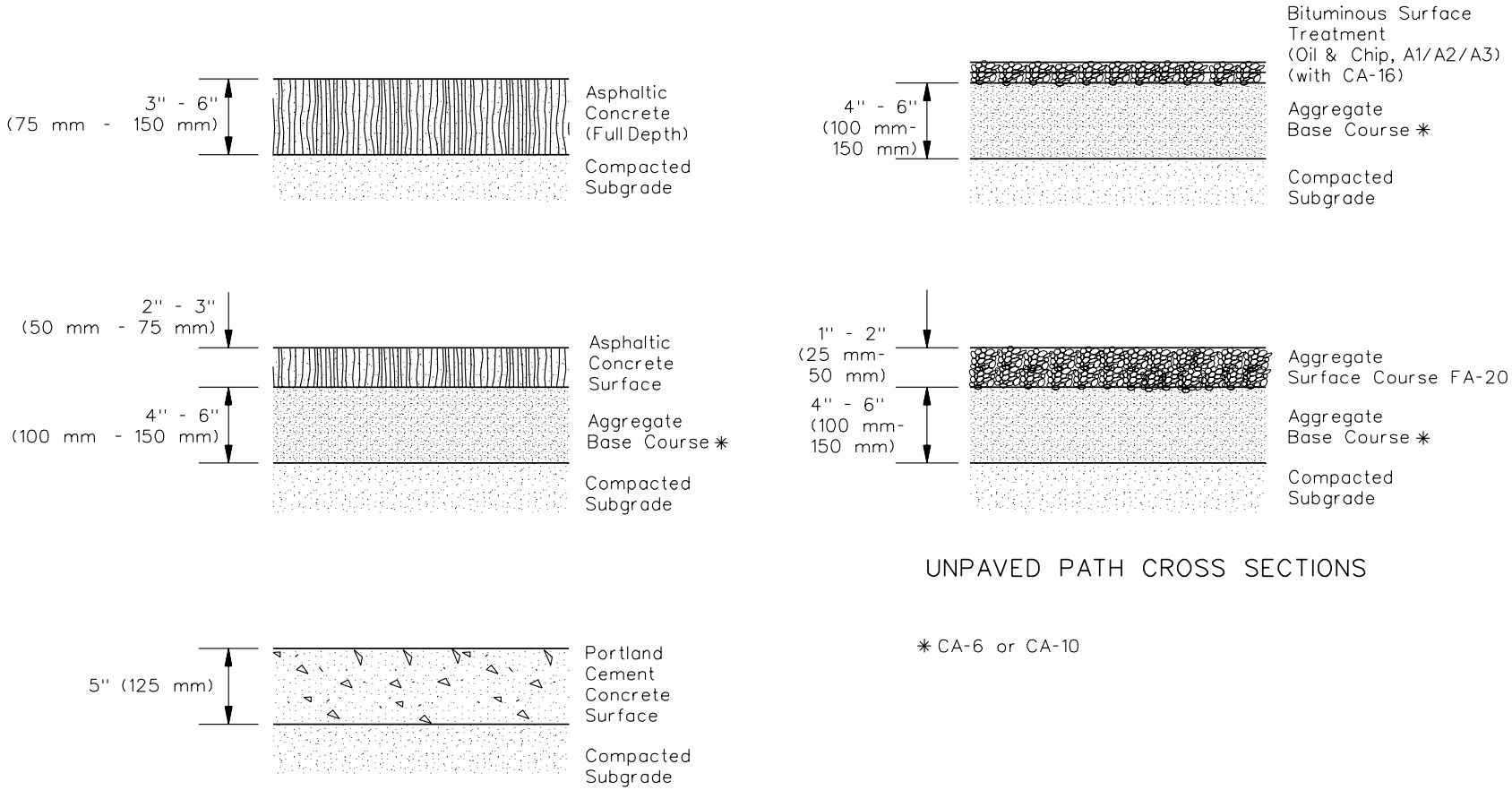

BIKE PATH CROSS SECTIONS

Figure 17-2AT

pavement cross sections. Consider geotextile fabric in areas where the stability of the subgrade is questionable. Fabric offers advantages that include extended pavement life, weed control, and lower maintenance.

In some situations, a bituminous surface treatment (A1/A2/A3) may be adequate for bike paths, considering the limitations of the surface (e.g., bleeding oil on hot summer days). The proper application of this type of surface is very important. Specify a CA 16 aggregate size or smaller. The surface should be rolled and the excess stone should be swept away, preventing accumulation at the outside edges of the bike path. Negotiating loose gravel on a bicycle can be very hazardous.

Crushed aggregate surfaces, while not encouraged because of high maintenance, can provide an adequate surface if prepared properly and routinely maintained. The subgrade should be properly compacted and a geotextile fabric mat used if the soil is soft or unstable. Crushed aggregate surface course (FA 20 or equivalent) should be placed over a base course and properly rolled and compacted. As discussed in Section 17-2.02(h), avoid using these surfaces on grades exceeding 3% and in areas where water overflow would wash away the surface. In these areas, stabilize the surface with bituminous or with an oil/chip combination. Figure 17-2AU provides information regarding the advantages and disadvantages of various bike path surfaces.

SURFACE MATERIAL	ADVANTAGES	DISADVANTAGES
Crushed Aggregate	Soft but firm surface; natural material; moderate cost; rough surface; accommodates some multi-use.	Surface can rut or erode from heavy rainfall; surface softens when set - bike tires, horses will damage surface; regular maintenance to keep consistent surface; replenishing aggregate may be a long-term expense; not for slopes >3%.
Bituminous Surface Treatment (also called Oil & Chip, Chip Seal)	Inexpensive to apply; more stable surface, durable.	Potential for oil bleeding to surface in hot weather, application methods important to minimize loose gravel.
Asphalt	Hard surface; supports most types of use; all weather; does not erode; accommodates most users simultaneously; low maintenance.	Higher installation costs; more costly to repair; not a natural surface; freeze/thaw can crack surface; heavy construction vehicles need access.
Concrete	Hardest surface; easy to form to site conditions; supports multiple use; lowest maintenance; resists freeze/thaw; best cold weather surface; best for wet conditions.	High installation cost; costly to repair; not a natural looking surface; construction vehicles will need access to the trail corridor.

BIKE PATH/TRAIL SURFACE SYNOPSIS

Figure 17-2AU

17-3 BICYCLE OPERATING CHARACTERISTICS

Bicycle operating characteristics and design factors are important elements of design. There are many different types and sizes of bicycles, ranging from children's cycles to tandem units for two riders, as well as buggy carts for transporting children and other items. Typical bicycle dimensions and clearances are shown in Figures 17-3A and 17-3B, respectively.

Characteristics	Dimensions*
Width	2 ft (630 mm)
Length	6 ft (1.8 m)
Height	7 ft (2.2 m)
Vertical Pedal Clearance	0.5 ft (150 mm)

**Note: If bike trailers are likely, the characteristic width becomes 3 ft – 3.5 ft (1.0 m - 1.1 m) wide and 9 ft (2.7 m) long. The indicated height of an adult bicyclist takes into consideration that the rider may be standing up while riding. Adult bicyclists sit between 5 ft (1.5 m) and 6 ft (1.8 m) above the riding surface while sitting on the saddle.*

TYPICAL BICYCLE AND RIDER DIMENSIONS

Figure 17-3A

Lateral Clearances		Vertical Clearance	
Bike to Parked Car	2 ft (600 mm)	Bike Rider to Overhead Obstruction	2 ft (600 mm)
Bike to Curb Drop-Off	2 ft (600 mm)	**Maneuvering Clearances**	
Bike to Utility Poles, Trees, Hydrants	2 ft (600 mm)	Bike to Pavement Edge	1 ft (300 mm)
Bike to Soft Shoulder	1.5 ft (450 mm)	Bike to Other Bike	2.5 ft (750) mm
Bike to Sloped Drop-Off	1 ft (300 mm)	Bike to Pedestrian	2.5 ft (750 mm)
Bike to Raised Curb	1 ft (300 mm)	Turning Radius	5 ft (1.5 m) (min)

Note: Because turning radius, sight distance, and braking of bicycles differ significantly from that of motor vehicles, design of bicycle facilities should take a conservative approach. This conservative approach should accommodate differing aspects of bikes, including the fact that riders are of different skill levels.

BICYCLE OPERATIONAL CHARACTERISTICS

Figure 17-3B

17-4 PEDESTRIAN ACCOMMODATIONS

17-4.01 General

Pedestrian accommodations are an integral part of urban and suburban transportation corridors. They facilitate pedestrian travel and access to public transportation, thereby contributing to alleviation of urban traffic congestion. The most pressing need for accommodation is at points of community development that result in pedestrian concentrations near or along the highway, such as at schools, public transportation stations and stops, local businesses, industrial plants, hospitals, churches, shopping centers, parking lanes, etc. Accommodations can include sidewalks, elevated walkways, grade-separated structures, stairs, curb ramps, and traffic signal devices.

17-4.02 Policies

Consider the travel needs of all users of a transportation corridor when planning transportation improvements. If during the planning phase of a project, pedestrian travel in the vicinity of the project is determined to be sufficient to warrant consideration, provide appropriate accommodations.

Policies relating to construction and maintenance, including sidewalk/curb ramps for the disabled, are addressed in Chapter 58. Financial responsibilities for pedestrian accommodations within Municipalities are addressed in Chapter 5.

17-4.03 Warrants

Pedestrian accommodations will be considered appropriate if they are not already available and any of the following conditions exist:

- there is current evidence of frequent pedestrian activity;
- there is a history of pedestrian-related crashes;
- the roadway improvement will create a safety impediment to existing or anticipated pedestrian travel (e.g., adding lanes so that the improvement itself acts as a barrier to pedestrian traffic);
- there is urban or suburban development that would attract pedestrian travel along the route to be improved;
- pedestrian-attracting development is expected along the route within five years of project completion, either as documented in a local plan or anticipated as a factor of similar development history; and/or

- the roadway provides primary access to a park, recreation area or other significant destination, or across a natural or man-made barrier.

Overpasses and underpasses will be evaluated on a case-by-case basis considering the type of pedestrian travel, travel generators (e.g., schools, factories, stadiums, parks, transit terminals, shopping districts), the amount of anticipated non-motorized traffic, and the safety impacts of not providing the accommodations. Anticipated pedestrian trip length to generators should be 1 mile (2 km) or less and the adverse travel distance alleviated by construction to the facility should be greater than 0.5 miles (1 km).

17-4.04 Design

Sidewalks normally are 5 ft (1.5 m) wide. When obstructions do not allow a width of 5 ft (1.5 m) for a short distance, provide a clear sidewalk width of a least 3 ft (1 m) for adequate passage of pedestrians and the disabled. Sidewalks wider than 5 ft (1.5 m) may be allowable if compatible with the local sidewalk network or if intended to accommodate a wider range of users, such as bicyclists. Facilities intended to also accommodate bicycle travel should follow the guidance in Section 17-2. Typical sections for sidewalks along roadways are presented in Chapter 48. Policies and guides for sidewalk/curb ramps for the disabled are addressed in Chapter 58.

Project limits may be extended beyond highway improvements for reasonable distances to include necessary pedestrian facilities at nearby intersections, to provide access to public transportation facilities, or to avoid short sidewalks gaps. Any such extensions should be reflected in the Phase I report.

17-4.05 Documentation

Document in the Phase I report the reasons for providing or not providing pedestrian accommodations. Include a discussion of the coordination with local officials concerning, at a minimum, the selection of access routes for the disabled. Indicate the location of the ramps to be provided on the Intersection Design Studies. The impact of access routes for the disabled should be assessed in any request for a design exception.

17-4.06 Pedestrian Accommodations During Construction

The *Standard Specifications* addresses pedestrian needs during construction for the typical project. However, added attention is desirable on projects that are adjacent to schools, hospitals, rest homes, businesses, and other developments, and have high volumes of traffic and pedestrians. Special attention also should be directed at maintaining pedestrian access to public transportation facilities at all times during construction. Use the following guidelines in determining the need to include temporary sidewalks as part of PS&E:

- where a known generator such as a school, hospital or neighborhood shopping center, or known facility for the disabled, such as a nursing home, exists;

- if the principal access for pedestrian traffic to a business is by an existing paved surface and the surface will be removed; and

- when the construction sequence will include the removal of existing sidewalks and the new sidewalks will not be constructed prior to a winter shutdown.

Temporary sidewalks shall be a minimum of 3 ft (1 m) in width. Consider wider sidewalks in areas where a high pedestrian volume and/or disabled persons are known to exist. If the temporary sidewalk is to remain in place for more than four weeks, it shall be constructed with a minimum of 2 in (50 mm) of Portland cement or bituminous concrete at the Contractor's option. Otherwise, give the Contractor the option to use 2 in (50 mm) of Portland cement or bituminous concrete or a minimum 3 in (75 mm) compacted aggregate (CA 10 or CA 12), Type B or other similar locally available aggregate approved by the Engineer. The pay item should be Temporary Sidewalk, measured in square feet (square meters), and should include removal after the permanent sidewalks are placed.

17-4.07 Maintenance and Jurisdiction

Jurisdiction and maintenance of pedestrian walkways are considered a local responsibility and should be coordinated with Local Agencies early in the planning process (see Chapter 5).

17-5 REFERENCES

The following are applicable references for bicycle facility accommodation:

1. *Guide for the Development of Bicycle Facilities,* AASHTO, 1999.

2. *Selecting Roadway Design Treatments to Accommodate Bicycles,* Federal Highway Administration, 1994.

3. *Trails for the Twenty-First Century —Planning, Design, and Management Manual for Multi-Use Trails,* Rails-to-Trails Conservancy, 1993.

4. *Arizona Bicycle Facilities Planning and Design Guidelines*, Arizona Bicycle Task Force, 1988.

5. *Bicycle Planning and Facility Workshop Manual*, Northwestern University Traffic Institute.

6. *Illinois Manual on Uniform Traffic Control Devices (ILMUTCD),* IDOT.

7. *National Bicycling and Walking Study: Case Study No. 24 — Current Planning Guidelines and Design Standards Being Used By State and Local Agencies for Bicycle and Pedestrian Facilities*, Federal Highway Administration, 1994.

8. *North Carolina Bicycle Facilities Planning and Design Guidelines*, North Carolina Department of Transportation, 1994.

9. *Oregon Bicycle and Pedestrian Plan*, Oregon Department of Transportation, 1998.

10. *Recommendations for Accessibility Guidelines: Recreational Facilities and Outdoor Developed Areas,* Access Board Recreation Access Advisory Committee, 1994 or subsequent edition.

11. *Standard Specifications for Road and Bridge Construction,* Illinois Department of Transportation.

12. *Warrants for Pedestrian Over and Underpasses,* Federal Highway Administration, 1984, Report # FHWA-RD-84/082.

13. Checklist for Organizations and Public Coordination (Figure 17-1C) addresses:

- League of Illinois Bicyclists, 2935 Barberry Ct., Aurora, IL 60504.
- Illinois Department of Natural Resources, Office of Planning and Realty, One Natural Resources Way, Springfield, IL 62702-1271
- Illinois Trails Conservancy, 144 West Main Street, PO Box 10, Capron, IL 61012
- Chicagoland Bicycle Federation, 650 South Clark, Suite 300, Chicago, IL 60605

All projects involving bicycle accommodation for the Department will be in accordance with Reference publications 1, 2, and 3 above. For projects involving separate bikeways, guidance beyond the AASHTO *Guide* (i.e., Reference Publication 1) is available in Reference Publication 3.

17-6 BICYCLE CHECKLISTS

CHECKLIST FOR BICYCLE TRAVEL GENERATORS IN PROJECT VICINITY

Generators	Yes	NA	Generators	Yes	NA
Residential Areas	☐	☐	Shopping Centers	☐	☐
Parks	☐	☐	Hospitals	☐	☐
Recreation Areas	☐	☐	Employment Center	☐	☐
Churches	☐	☐	Government Offices	☐	☐
Schools	☐	☐	Local Businesses	☐	☐
Libraries	☐	☐	Industrial Plants	☐	☐
Existing Bicycle Trails	☐	☐	Public Transportation Facilities	☐	☐
Planned Bicycle Trails	☐	☐	Other ( )	☐	☐

CHECKLIST FOR ORGANIZATIONS AND PUBLIC COORDINATION

Organization	Yes	NA	Organizations	Yes	NA
Metropolitan Planning Organization (if applicable)	☐	☐	League of Illinois Bicyclists	☐	☐
Local Municipalities	☐	☐	Illinois Department of Natural Resources	☐	☐
Park or Forest Preserve Districts	☐	☐	Illinois Trails Conservancy	☐	☐
Sub-Regional Planning Council (as appropriate)	☐	☐	Chicagoland Bicycle Federation (District 1 only)	☐	☐

Organizations and Public Coordination addresses:

- League of Illinois Bicyclists, 417 South Dearborn, Suite 1000, Chicago, IL 60604
- Illinois Department of Natural Resources, Office of Planning and Realty, 524 S. 2nd Street, Springfield, IL 62701
- Illinois Trails Conservancy, 142 West Main Street, PO Box 0454, Capron, IL 61012
- Chicagoland Bicycle Federation, 417 South Dearborn, Suite 1000, Chicago, IL 60604

EXAMPLE OF MAP TO ACCOMPANY CHECKLIST FOR BICYCLE TRAVEL

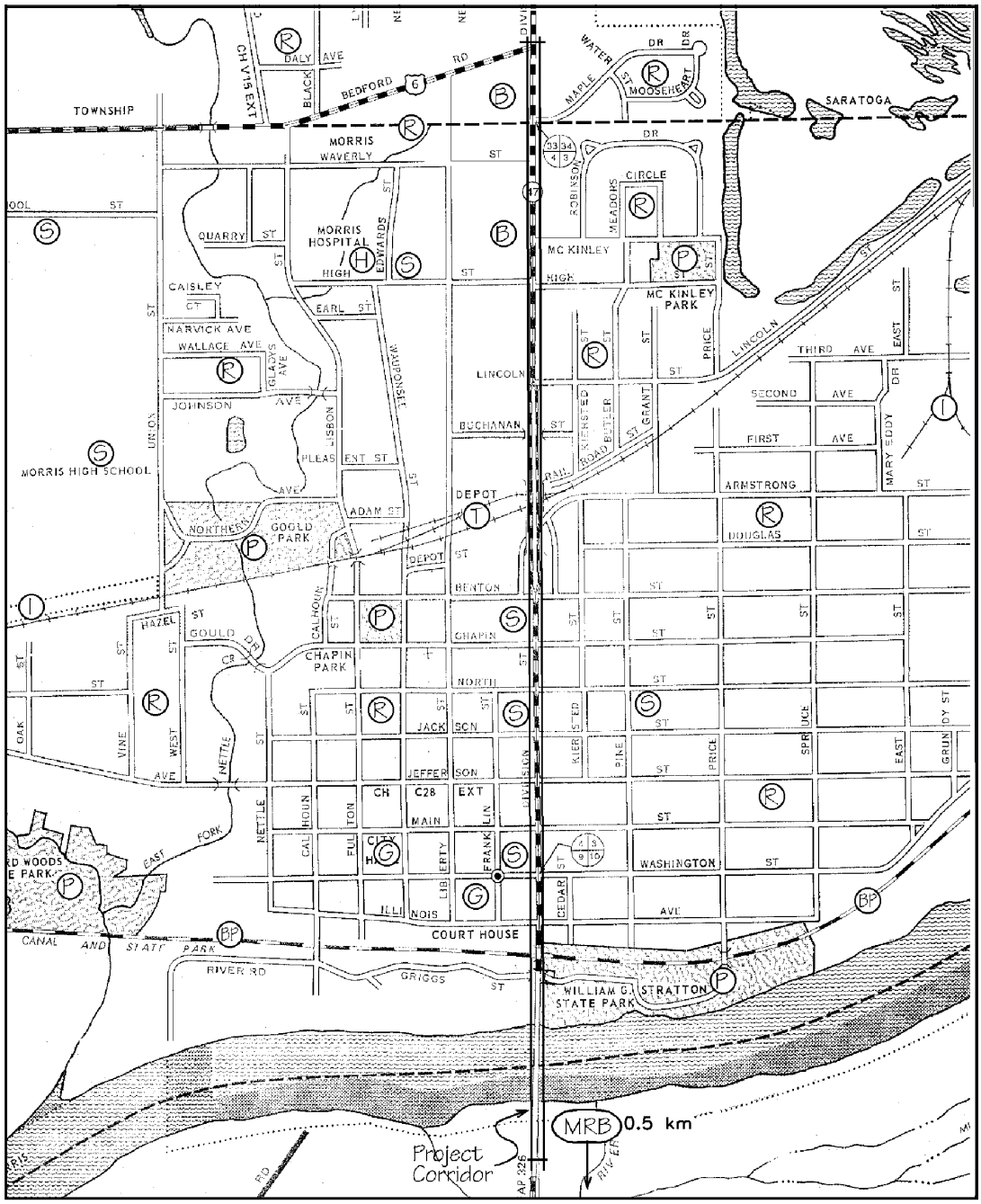

R	Residential Areas	BP	Existing Bicycle Trails	G	Government Offices
P	Parks	PBP	Planned Bicycle Trails	B	Local Businesses
P	Recreational Areas	M	Shopping Centers	I	Industrial Plants
C	Churches	H	Hospitals	T	Public Transit Facilities
S	Schools	E	Employment Centers	O	Other

FORM FOR BICYCLE TRAVEL ASSESSMENT

Route _____
Section _____
County _____

1) Where would bicyclists cross the project?	_____
2) Where would bicyclists need to ride parallel to the project?	_____
a) Does the project provide unique or primary access (see Note 1): 1. Across a river, railroad, highway corridor or other natural or man-made barrier?	_____
2. Into or out of a residential or commercial development?	_____
3. Between communities or other likely significant destinations — such as a university campus or recreation facility?	_____
b) Are there any secondary roads parallel to the project that could reasonably be used by cyclists as alternates to access these destinations (see Note 2)?	_____
If so, how far from the corridor are these roads? (A key consideration with parallel roads is whether there are significant destinations located on the project corridor that bicyclists would need to access.)	_____
3) Do local governmental entities or other organizations have plans for bicycle facilities or generators, such as a park or recreational area that could affect this project or generate additional travel in the project corridor?	_____

Notes:

1. *Unique or primary access is defined as access which is not otherwise available within a reasonable riding distance of 1 mile (2 km).*

2. *Secondary roads that could be used as alternate routes are usually within 2-3 blocks of projects in urban areas, within 0.5 miles (1 km) in suburban areas, and within 1 mile (2 km) in rural areas.*

CHAPTER FORTY-SIX
STRATEGIC REGIONAL ARTERIALS
(New Construction/Reconstruction)

46-2 URBAN SRA ROUTES
46-2.12 Pedestrians and Bicyclists

Safe movement and accessibility are key issues for bicyclists and pedestrians. Urban SRA corridors are likely to experience bicyclists and a high volume of pedestrians, which may significantly impact the capacity and operations of the SRA route. One advantage of urban routes is that there typically are close parallel routes that may be considered for bicycle and pedestrian routes. Identify these parallel facilities as bicycle routes so that the SRA routes can be reserved for vehicular traffic. At major obstacles (e.g., river crossings, canals, railroad bridges, limited access facilities), ensure that adequate provisions are available so that pedestrians and bicyclists have access across these barriers. Chapter 17 provides additional information for bicycle and pedestrian facilities. Chapter 58 provides information on disabled accessibility requirements.

46-3 SUBURBAN SRA ROUTES
46-3.13 Pedestrians and Bicyclists

On suburban SRA routes, more options are available for accommodating pedestrian and bicycle access than in urban areas. For example, although right-of-way availability is still a critical issue, dense development immediately adjacent to the roadway is not as common an occurrence as in urban areas. Provisions for bicyclists and pedestrians may be accommodated within the SRA right-of-way itself. In suburban situations, alternative parallel routes may not always be available.

Access across major obstacles (e.g., river crossings, railroads, limited access facilities) or barriers will be accommodated by the SRA if alternative access is not feasible. The choice of how to provide access within the SRA corridor is determined on a case-by-case basis. Under all situations, the goal is to provide a continuous system of bicycle and pedestrian routes. Chapter 17 provides guidance on the design of bicycle and pedestrian facilities. Chapter 58 provides information on disabled accessibility requirements.

46-4 RURAL SRA ROUTES
46-4.11 Pedestrians and Bicyclists

The criterion for pedestrians and bicyclists presented in Section 46-3.13 is also applicable for rural SRA routes.

IDOT Bureau of Design and Environment Manual: Excerpt From:

CHAPTER FORTY-EIGHT
URBAN HIGHWAYS AND STREETS
(New Construction/Reconstruction)

48-2.04 Sidewalks

Sidewalks are considered integral parts of the urban environment. In these areas, travelers frequently choose to make their trip on foot, and pedestrians desire to use a paved surface for the trip. When constructing sidewalks, the designer should consider the following:

1. Warrants. In general, if pedestrian activity is anticipated, provide sidewalks along all curbed suburban and urban facilities. Extend all sidewalks to logical termini. If sidewalks are not provided in the initial design, grading should be completed so that sidewalks can be added in the future. If sidewalks will not be installed, the designer should confer with local officials to ensure that sidewalks are not required or desired. New sidewalks or sidewalks replaced because of deterioration which meet these warrants, will only be constructed if the local agency is willing to participate financially and assume the maintenance responsibility for the sidewalk in accordance with the criteria in Chapter 5.

2. Widths. A typical sidewalk is 5 ft (1.5 m) wide. If no buffer area is provided, the sidewalk should be 7 ft (2.0 m) wide to accommodate any appurtenances which may be included in the sidewalk; see Item #4 below. High pedestrian volumes may warrant greater widths in business areas and school zones. In these cases, a detailed capacity analysis may be required to determine the sidewalk width. Use the *Highway Capacity Manual* for this analysis.

3. Buffer Areas. If the available right-of-way is sufficient, provide a buffer area between the back of curb and sidewalk. These areas provide space for snow storage, utilities, and allow a greater separation between vehicles and pedestrians. The buffer area should be 2 ft to 3 ft (600 mm to 900 mm) wide to be effective and wider if practical. Buffer areas may also be used for the placement of roadside appurtenances.

4. Appurtenances. Where a buffer area cannot be provided, the designer should consider the impact of roadside appurtenances within the sidewalk (e.g., mailboxes, fire hydrants, parking meters, utility poles). These elements may reduce the effective usable width because they interfere with pedestrian activity. Typically, a 1 ft (300 mm) minimum width is provided between the sidewalk and right-of-way line. Utility poles usually can be located behind the sidewalk in this area providing a clear sidewalk width of 5 ft (1.5 m).

5. CBD Areas. In central business districts, the entire area between the back of curb and the front of buildings is fully paved as a sidewalk.

6. Disabled Accessibility. Wherever a sidewalk is designated as an accessible route, sidewalk widths, cross slopes, longitudinal grades, curb ramps, etc., along public rights-of-way must meet the ADA criteria presented in Chapter 58.

7. Bridges. In general, if there is or expected to be pedestrian activity across a bridge, include sidewalks on both sides of the bridge. On long bridges, it may be more cost effective to provide a

single sidewalk on one side. However, a safe crossing must be provided in advance of the bridge if there is evidence of pedestrian

IDOT Bureau of Design and Environment Manual: Excerpts From:

CHAPTER FIFTY-EIGHT
SPECIAL DESIGN ELEMENTS

58-1 ACCESSIBILITY STANDARDS FOR THE DISABLED

58-1.01 General

58-1.01(a) References

Many highway elements can affect the accessibility and mobility of disabled individuals. These include sidewalks, parking lots, buildings at transportation facilities, overpasses, and underpasses. The Department's accessibility criteria complies with the 1990 *Americans with Disabilities Act* (ADA) and the *Illinois Environmental Barriers Act (410 ILCS 25/1)*. The following sections present accessibility criteria which are based on information presented in the *ADA Accessibility Guidelines for Buildings and Facilities* (ADA Guidelines), the *Illinois Accessibility Code* (Illinois Capital Development Board), *Uniform Federal Accessibility Standards* (UFAS), and the American National Standards Institute (ANSI). Where other agencies or local codes require criteria which exceed the *ADA Guidelines*, then the stricter criteria may be required. This will be determined on a case-by-case basis.

58-1.01(b) Maintaining Comparable Access

Project designs must include measures to maintain accessibility for the disabled at levels existing before completion of the project. For example, where sidewalks are replaced as part of a project, the district will undertake the necessary measures to ensure that accessibility is provided or maintained. This may involve construction of additional sidewalks at the State's expense. Contact BDE for guidance when these situations occur. Accessibility should be maintained during construction of all projects. If a project is being constructed in stages, the designer may need to provide for the reconstruction of certain curb ramps at different times to maintain comparable accessibility. Where a project not being constructed in stages will significantly affect accessibility, a temporary accessibility plan should be developed and included in the construction plans.

58-1.03 Bus Stops

The following accessibility criteria apply to the construction of bus stops:

1. Bus Stop Pads. New bus stop pads constructed for use in conjunction with a lift or ramp shall meet the following criteria:

- Provide a firm, stable surface.
- Provide a minimum clear length of 96 in (2.440 m) (measured from the curb or roadway edge) and minimum clear width of 60 in (1.525 m) (measured parallel to the roadway).
- Connect the pad to streets, sidewalks, or pedestrian paths with at least one accessible route.
- The slope of the pad parallel to the roadway will be the same as the roadway to the maximum extent practical.
- For drainage, provide a desirable cross slope of 1.5% up to a maximum cross slope of 2% perpendicular to the roadway.

2. Bus Shelters. Where new or replaced bus shelters are provided, install or position them to permit a wheelchair user to enter from the public way and reach a location within the shelter having a minimum clear floor area of 30 in by 48 in (760 mm by 1.220 m). An accessible route shall be provided from the shelter to the boarding area.

58-1.05 Accessible Route

58-1.05(a) Definition

An accessible route is a continuous, unobstructed path connecting all accessible elements and spaces in a building, facility, or site. A “site” is defined as a parcel of land bounded by a property line or a designated portion of a public right-of-way. A "facility" is defined as all or any portion of buildings, structures, site improvements, complexes, equipment, roads, walks, passageways, parking lots, or other real or personal property on a site. Interior accessible routes may include corridors, floors, ramps, elevators, lifts, and clear floor space at fixtures. Exterior accessible routes may include parking access aisles, curb ramps, crosswalks at vehicular ways, walks, ramps, and lifts.

58-1.05(b) Selecting Accessible Routes

Accessible routes must provide at least one accessible route within the boundary of the site from public transportation stops, accessible parking, accessible passenger loading zones, and public streets or sidewalks to the accessible route for the building they serve. The accessible route shall, to the maximum extent feasible, coincide with the route for the general public.

For highway projects, the Department requires at least one continuously accessible route along the highway. During the Phase I study, the designer should examine the project area and note the presence or absence of accessible routes. The determination of an accessible route is the responsibility of the designer and should be logical and practical. For instance, a continuously accessible route on sidewalks should not alternate between one side of a highway and the other unless constrained by terrain, slopes, or other obstacles, or unless caused by temporary pedestrian re-routing due to construction of sidewalks and/or curbs and gutters.

Defining an accessible route may require coordination with the local agency involved in maintaining the continuous route. This also may require coordinating with local support groups. When determining the location of a continuously accessible route, consider the following:

- location of pedestrian generators, particularly those in high priority areas that would be likely to serve disabled pedestrians (e.g., medical facilities, high-rise buildings, housing for the elderly, shopping areas, nursing homes, libraries, government buildings and offices);
- location of existing sidewalks and curb ramps;
- location of existing utilities, signs, or other poles, or features (e.g., steps) that would need to be removed to provide full accessibility;
- existing ground contours that would affect the longitudinal and transverse slope of sidewalks and ramps;
- location of marked crosswalks; and
- presence of drainage features (e.g., inlets, manholes).

58-1.05(c) Alternative Sidewalk Routes

In some instances, sidewalks may not be accessible because of gaps, steps, or steep terrain. In these instances, reconstruction of curb ramps is not necessary if these obstacles prohibit the use of the sidewalk by disabled individuals.

The presence of alternative accessible routes lessens the need for reconstruction in areas in which the terrain or proximity of structures to the sidewalk line will cause substantial difficulty and cost in reconstruction of curb ramps. For example, vaulted sidewalks attached to adjacent structures should not be altered if structural modifications to buildings are required. If an alternative accessible route is available within one city block, curb ramps with construction difficulties may

not need to be reconstructed to comply with the accessibility criteria. In these cases, contact the BDE Project Development field engineers for guidance and policy interpretation.

Similarly, ramps leading to pedestrian overpass or underpass structures need not be installed if their construction will be extraordinarily difficult or costly, and if an alternative at-grade accessible crossing is available for disabled individuals within approximately 500 ft (150 m) or less from the pedestrian structure. These alternative crossings should have pedestrian actuated walk signals or a programmed protected pedestrian crossing phase. For cross sections with four or more lanes, all planned or existing islands or raised-curb medians should include flat mid-crossing refuges to ensure that disabled individuals in wheelchairs have a place to wait for signal changes.

Certain high-volume roads such as important regional and local arterials (i.e., two or more lanes of travel in each direction) may limit pedestrian crossings to important intersections with pedestrian signal cycles to preserve capacity. For safety, it is not necessary to provide crossings for disabled pedestrians at locations other than these.

58-1.06 Sidewalks

Section 48-2.04 presents the Department's warrants and design criteria for sidewalks. In addition, all sidewalks must comply with the ADA Guidelines presented in the following sections.

58-1.06(a) Criteria for Accessible Routes

For sidewalks on accessible routes, ensure that the following accessibility criteria are met:
1. Width. The typical sidewalk width is 60 in (1.5 m). Because of restrictions (e.g., poles, right-of-way), this width may be reduced. The minimum clear width at any isolated point along an accessible route shall be 36 in (915 mm).
2. Passing Space. If the sidewalk has less than 60 in (1.5 m) clear width for an extended distance, then passing spaces at least 60 in by 60 in (1.5 m by 1.5 m) shall be located at reasonable intervals not to exceed 200 ft (60 m). A T-intersection between two walks is an acceptable passing space. Paved driveways may also provide acceptable passing space in residential areas.
3. Surface. All sidewalk surfaces shall be stable, firm, and slip resistant. The longitudinal gradient should be flush and free of abrupt changes. However, changes in level up to ¼ in (6 mm) may be accommodated without treatment. Changes in level between ¼ in and ½ in (6 mm and 13 mm) shall be beveled with a slope no greater than 1:2. Changes greater than ½ in (13 mm) shall be accommodated with a ramp; see Section 58-1.08.
4. Drainage Structures. Gratings should not be placed within the walking surface. If, however, gratings must be located in walking surfaces, then they shall have spaces no greater than ½ in (13 mm) wide perpendicular to the dominant direction of travel.
5. Slopes. The sidewalk cross slope shall not exceed 2%. Where driveways or alleys intersect with sidewalks, give design priority to the sidewalk rather than to the driveway or alley. This may require ramping the sidewalk down to the driveway. These longitudinal slopes must meet the criteria in Section 58-1.08 for ramping of sidewalks.
6. Protruding Objects. Objects projecting from walls (e.g., signs, telephones, canopies) with their leading edges between 27 in (685 mm) and 80 in (2.030 m) above the finished sidewalk shall not protrude more than 4 in (100 mm) into any portion of the sidewalk. Freestanding objects mounted on posts or pylons may overhang their mountings up to a maximum of 12 in (305 mm) when located between 27 in (685 mm) and 80 m (2.030 m) above the sidewalk or ground surface. Protruding objects less than 27 in (685 mm) or greater than 80 in (2.030 m) may protrude any amount provided that the effective width of the sidewalk is maintained. Where the vertical clearance is less than 80 in (2.030 m), provide a barrier to warn the blind or visually impaired person.

7. Separation. Sidewalks will be separated from roadways by curbs, planted parkways, or other barriers, which will be continuous except where interrupted by driveways, alleys, or connections to accessible elements.
8. Bus Stops. Where bus passenger loading areas or bus shelters are provided on or adjacent to sidewalks, they must comply with the criteria in Section 58-1.03.
9. Curb Ramps/Crosswalks. All curb ramps and crosswalks on an accessible route must comply with the criteria in Section 58-1.09.
10. Bridges. Bridges present special problems for meeting the above sidewalk criteria. Due to geometric restraints of the facility being crossed, special treatments may be required; consult with BDE and the Bureau of Bridges and Structures.

58-1.06(b) Criteria for Non-Accessible Routes

In general, sidewalks on non-accessible routes along public rights-of-way should meet the criteria presented in Section 58-1.06(a). However, some flexibility is required to meet the adjacent roadway conditions and to provide practical designs. The criteria in Section 58-1.06(a) should be implemented, unless noted as follows:
1. Slopes. Provide the flattest longitudinal slope practical. Preferably, the longitudinal slope should not exceed 1V:12H or the longitudinal slope of the adjacent street. However, at driveways and alleys, the sidewalk may need to be ramped. If space limitation prohibits the use of the 1V:12H slope, then slopes between 1V:10H and 1V:12H are permissible for a maximum rise of 6 in (150 mm). Slopes between 1V:8H and 1V:10H are allowed for a maximum rise of 3 in (75 mm). Slopes steeper than 1V:8H are not permissible. Sidewalk slopes 1V:20H or greater do not require the use of handrails as defined in Section 58-1.08. Cross slopes greater than 2% may be used provided adjacent portions are smoothly blended.
2. Stairs. Sidewalks with stairs are allowed on non-accessible routes, provided an unobstructed route is available between accessible entrances. Section 58-1.07 presents criteria for stairs.
3. Separation. Sidewalks adjacent to the curb or roadway may be offset to avoid a nonconforming cross slope at driveway aprons by diverting the sidewalk around the apron;
see Figure 58-1D.
4. Protruding Objects. Objects on or along a sidewalk which are not fixed (e.g., newspaper vending machines, trash receptacles) are not subject to the *ADA Guidelines*. Fixed items (e.g., signal controller cabinets, light standards, utility poles, mailboxes, sign supports) should not be placed within the sidewalk. In those locations where it is impractical to provide the minimum sidewalk width, maintain a minimum access width of 36 in (915 mm).

58-1.06(c) Historic Districts and Transportation Enhancement Projects

In historic districts, some areas may have sidewalks which are raised several steps above the roadway or which are constructed of brick, stones, or loose gravel. Additionally, old trees may restrict horizontal clearance. Construction of accessible curb ramps in these areas may not be necessary. Because each situation may be unique, the district should contact BDE for guidance.

Some transportation enhancement projects (see Chapter 18) which involve landscaping and scenic beautification in historic districts or downtown areas may involve construction of brick sidewalks. In these situations, the use of bricks on curb ramps and on crosswalks should not occur without concurrence from BDE. Alternative design treatments (e.g., tinted concrete, brick or stone-texturized liners) for ramps and crosswalks are encouraged in place of bricks; consult with BDE.

58-1.07 Stairs

Stairs shall not be part of an exterior accessible route because they cannot be safely negotiated by individuals in wheelchairs. Where stairs are used, they should be designed to be accessible by

other disabled individuals. Therefore, the design of stairs must comply with Section 4.9 of the *ADA Guidelines*. This includes the provision of handrails.

58-1.08 Ramps

Any part of an accessible route with a slope greater than 1:20 shall be considered a ramp and shall conform to the *ADA Guidelines* for the design of ramps. This includes the provision of handrails. The following criteria must be met for ramps on accessible routes:

1. Slope and Rise. The least possible slope should be used for any ramp. Figure 58-1E provides the maximum allowable ramp slopes for new construction. Curb ramps and ramps to be constructed on existing sites or in existing buildings or facilities may have slopes and rises as shown in Figure 58-1F, if space limitations prohibit the use of a 1:12 slope or less.
2. Width. The minimum clear width of a ramp shall be 36 in (915 mm).
3. Landings. Ramps shall have level landings at the bottom and top of each run and shall have the following features:
   - The landing shall be at least as wide as the ramp run leading to it.
   - The landing length shall be a minimum of 60 in (1.5 m).
   - If ramps change direction at landings, the minimum landing size shall be 60 in by 60 in (1.5 m by 1.5 m).
4. Handrails. If a ramp run has a rise greater than 6 in (150 mm) or a horizontal projection greater than 72 in (1.830 m), then it shall have handrails on both sides. Handrails are not required on curb ramps. See the *ADA Guidelines* for handrail criteria.
5. Cross Slope and Surfaces. The cross slope of ramp surfaces shall be no greater than 2%. Ramp surfaces shall comply with the criteria for "Surface" of sidewalks; see Section 58-1.06.
6. Edge Protection. Ramps and landings with dropoffs shall have curbs, walls, railings, or projecting surfaces that prevent people from slipping off the ramp. Curbs shall be a minimum of 2 in (50 mm) high.
7. Outdoor Conditions. Outdoor ramps and their approaches shall be designed so that water will not accumulate on walking surfaces.

ALLOWABLE RAMP DIMENSIONS
(New Construction)
Figure 58-1E

Slope	Maximum Rise	Maximum Run
Steeper than 1V:16H but no steeper than 1V:12H	30 in (760 mm)	30 ft (9 m)
Steeper than 1V:20H but no steeper than 1V:16H	30 in (760 mm)	40 ft (12 m)

Note: A slope steeper than 1V:12H is not allowed.

ALLOWABLE RAMP DIMENSIONS
(Existing Sites, Buildings, and Facilities)
Figure 58-1F

Slope	Maximum Rise	Maximum Run
Steeper than 1V:10H but no steeper than 1V:8H	3 in (75 mm)	2 ft (600 mm)
Steeper than 1V:12H but no steeper than 1V:10H	6 in (150 mm)	5 ft (1.5 m)

Note: A slope steeper than 1V:8H is not allowed.

58-1.09 Curb Ramps

58-1.09(a) General

All curbs and sidewalks shall be designed with curb ramps at all pedestrian crosswalks. This is required to provide adequate and reasonable access for the safe and convenient movement of physically disabled persons. For the purpose of this section, a pedestrian crosswalk is defined as that portion of a highway or street ordinarily included within the prolongation or connections of lateral lines of sidewalks at intersections. It also includes any portion of a highway or street distinctly indicated as a crossing for pedestrians by lines or other markings on the surface. It does not include such prolonged or connecting lines from an alley across a street.

58-1.09(b) Responsibility for Construction of Curb Ramps

Department responsibility for constructing or modifying curb ramps will be determined by the jurisdiction over affected highways and appurtenances pursuant to the applicable sections of the *Illinois Highway Code* (605 ILCS 5/1-101 *et seq.*) and by any relevant jurisdictional agreements or transfers. Jurisdiction will not be determined solely by ownership of right-of-way in fee simple or other ownership instrument, nor will jurisdiction be determined by the existence and provisions of maintenance agreements.

Use the Bureau of Local Roads and Streets publication *Jurisdictional Transfer Guidelines* as the initial basis for establishing jurisdictional responsibility. Where written jurisdictional agreements do not exist, contact the Bureau of Local Roads and Streets to determine the applicable jurisdiction of the highway.

When determining the need for curb ramps, consider the following:
1. No Curb Work. If curbs are not being altered as part of a project and there is no accessible sidewalk or other evidence of pedestrian usage (e.g., well-worn dirt paths), then construction or reconstruction of curb ramps is not required.
2. Curb Work. If curbs will be altered as part of a State project and there is an accessible sidewalk or evidence of pedestrian usage, the Department will reconstruct curb ramps consistent with the *Highway Standards* at 100% State expense regardless of jurisdiction.
3. Traffic Signals. On State traffic signal installation projects which involve reconstruction of curb ramps or sidewalks because of the placement of signal hardware, the State will be responsible for 100% of the costs of curb ramps as part of the project.
4. Local Jurisdiction. If curbs will not be altered as part of a project and the Department does not have jurisdiction over the curbs, provisions for curb ramps will be the responsibility of local governments. If the Department does not have jurisdiction over the roadway abutting the curbs (e.g., parking lane, traveled way), jurisdiction over the curbs is presumed to rest with the local government.
5. Department Jurisdiction. On State facilities, curbs and curb ramps which will not be altered as part of an improvement should still be removed and replaced if they do not meet Department criteria. Note that, if the Department has jurisdiction over the roadway, it usually can be assumed that it also has jurisdiction over the curbs adjacent to the roadway.
6. Radius Returns. At locations where radius returns for curbs under State jurisdiction meet curbs on a local side street, participation in the removal and reconstruction of curb ramps will occur at a ratio of 50% for the State and 50% for the local government.
7. Mid-Block Crossings. At locations where the Department has jurisdiction over curbs at mid-block crossings, only provide curb ramps if they are located at a marked crosswalk (striped and signed and/or signalized), and only if they can be provided consistent with the criteria shown in the *Highway Standards* without structural modifications to existing buildings or sidewalk

structures. The State will be responsible for 100% of the cost of mid-block curb ramps if the curbs will be altered as part of a project. The Department will participate at a 50% State/50% local ratio if curb ramps are altered as part of a local government project.
8. Alleys. Alleys are considered local streets which intersect sidewalks, both of which are a local responsibility. Therefore, accessibility considerations at alleys are primarily a local government concern. However, if a State project involves reconstruction of radius returns at alleys, the State's share may be 100% for curb ramps at the alley, similar to curb ramps at intersections.
9. Past Financial Participation. Do not use past financial participation arrangements for the construction of parking lanes and curbs or maintenance agreements affecting these lanes or curbs to apportion financial responsibility for reconstruction of curb ramps.
10. Maintenance Agreements. Once curb ramps are constructed or reconstructed, they should be included in maintenance agreements with local governments. Maintenance of curb ramps will be considered a local responsibility because they are an extension of the local sidewalk system.
11. Local Projects. In some instances, curb ramps may be built or reconstructed using local forces with the State billed accordingly for its 50% share. A joint agreement will be required for this type of arrangement. Ensure that the local government is informed that the State will only allow Class SI concrete to be used in performing this work. See Chapter 5 for more information.
12. SMART and 3P Projects. Districts may include limited reconstruction of curb ramps in 3P projects. If curb ramp work represents approximately more than 20% of the value of Illinois the project, then other program categories such as 3R should be used to accomplish the project, or a separate project or contract for curb ramp reconstruction should be considered. For "SMART"-type projects, curb ramp reconstruction work should not be more than 10% of the value of the entire project.

58-1.09(c) Design and Construction of Curb Ramps

Design and construct all curb ramps according to the criteria in the *Highway Standards*. Only use Type A curb ramps where the area on both sides of the ramp is a planting or other nonwalking area. For all other areas, use the Type B curb ramp with flared sides. Variances from this criteria must be obtained from BDE.
Alternative ramp textures may be used when a local government has selected and is using a different texture consistently throughout a community, and where there is evidence that such texture has been endorsed by or developed cooperatively by the local government and disabled individuals. Alternative textures must not depart radically from the *Highway Standards* and must exhibit a stable, firm, and slip-resistant surface. Where texture variances from the *Highway Standards* exist or are being contemplated, the district must notify, in writing, the BDE Policy and Procedures Section. A description of the alternative texture and evidence of coordination by the district with the local government or disabled community should be submitted as part of the notification. This notification need occur only once (i.e., it will not be necessary to submit information for each project using the same alternative texture).

When designing and locating curb ramps, consider the following:
1. Blind Pedestrians. Locate the curb ramp so that it will not be a safety hazard for blind pedestrians.
2. Parked Vehicles. Place the curb ramp so that it cannot be obstructed by parked vehicles.
3. Obstructions. The function of the curb ramp must not be compromised by other highway features (e.g., guardrail, catch basins, utility poles, signs). Also, it is desirable to move any obstructions near curb ramps whenever practical. When this is not practical, consider the direction of traffic relative to the placement of the curb ramp. It is important that drivers can see the person using the curb ramp.
4. Crosswalks. Curb ramps at marked crossings shall be wholly contained within the markings, except that the flared sides of a Type B curb ramp may be outside the crosswalk. At intersections

where there is no marked crosswalk, place the curb ramp within the area that would reasonably be expected to be used as a crosswalk.
5. Crosswalk Markings and Stop Bars. Note that the placement of curb ramps affects the placement of crosswalk markings and stop bars. Conversely, the location of existing crosswalk markings and stop bars will affect the placement of curb ramps. Some of the crosswalk marking constraints are shown in the *Highway Standards* and the *ILMUTCD*.
6. Diagonal Curb Ramps. Avoid using a diagonal curb ramp whenever practical due to its effect on the crosswalk width. It is preferable to use straight curb ramps rather than to use a diagonal curb ramp.
7. Raised-Curb Medians. Where raised-curb medians exist within a crosswalk, depress the median to the level of the crosswalk or provide curb ramps on both sides and a minimum level landing area 48 in (1.220 m) long by 36 in (915 mm) wide.
8. Pedestrian Signals. The location of the curb ramp must be consistent with the operation of pedestrian-actuated traffic signals, if present. In addition, locate the pedestrian pushbutton so it can be reached by wheelchair-bound individuals.

58-1.09(d) Crossing Controls

If a pedestrian crosswalk and curb ramp are present at an intersection with a traffic signal that has pedestrian detectors (push buttons), the following will apply:
1. Location. Locate the controls as close as practical to the curb ramp and, to the maximum extent feasible, permit operation from a level area immediately adjacent to the controls.
2. Surface. Provide a firm, stable, and slip-resistant area, a minimum of 36 in by 48 in (915 m by 1.220 m), to allow a forward or parallel approach to the controls.

58-1.10 Pedestrian Overpasses and Underpasses

When deciding where to locate a pedestrian crossing, highway and structural designers must coordinate their efforts to properly address the accessibility considerations. The following are applicable:
1. Warrants. Threshold warrants for considering a pedestrian overpass are dependent on pedestrian volumes, vehicular volumes, and distance to the nearest “safe” alternative crossing. These warrants are determined on a case-by-case basis. Additional guidance can be found in FHWA-RD-84/082 *Warrants for Pedestrian Over and Underpasses.*
2. Accessible Route. All current and future accessible routes must be identified. If existing routes are inaccessible, the designer must evaluate the likelihood that the routes will be made accessible in the future. This evaluation may lead to the decision to relocate the pedestrian overpass or underpass to another site where accessibility can be more easily provided.
3. Design. The proposed design must meet the *ADA Guidelines* criteria for stairs, ramps, curb ramps, and accessible routes. Also reference FHWA-IP-84-6 *Guidelines for Making Pedestrian Crossing Structures Accessible* for additional design information.